NR N77/N78/N79 DRx-LFEM

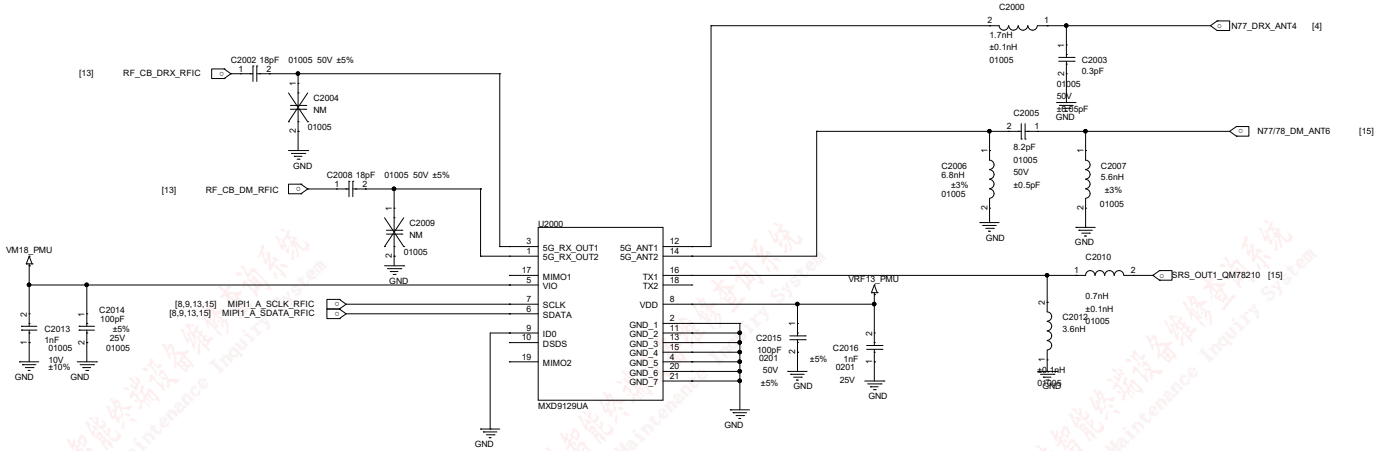

MHB DRX

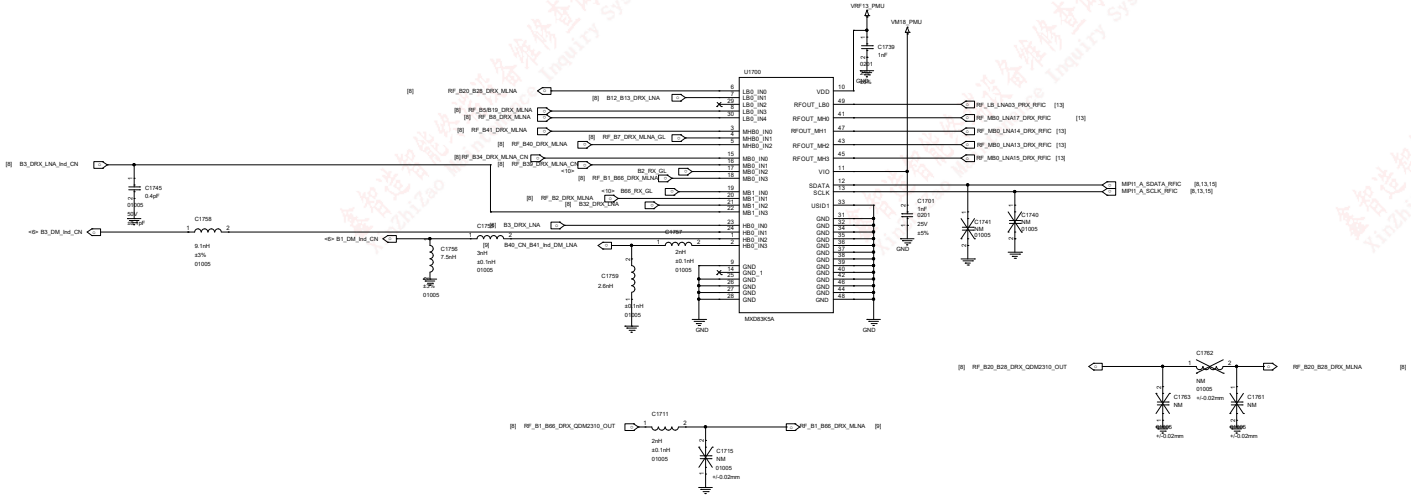

DRX HB

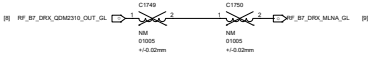

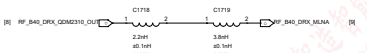

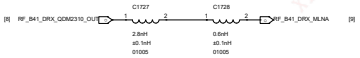

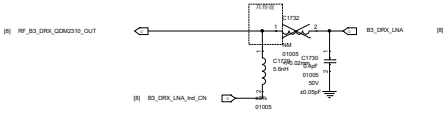

DRX MB

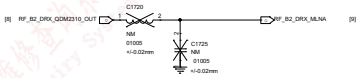

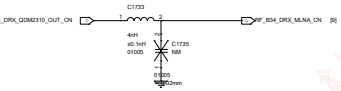

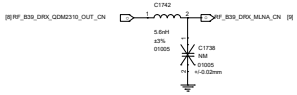

DRX LB

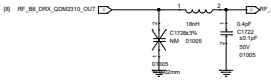

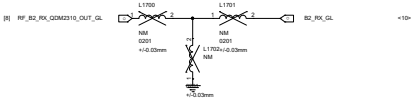

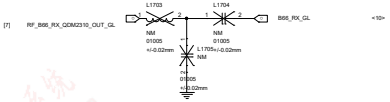

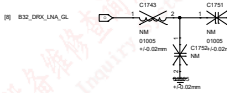

MHB PRX/DM

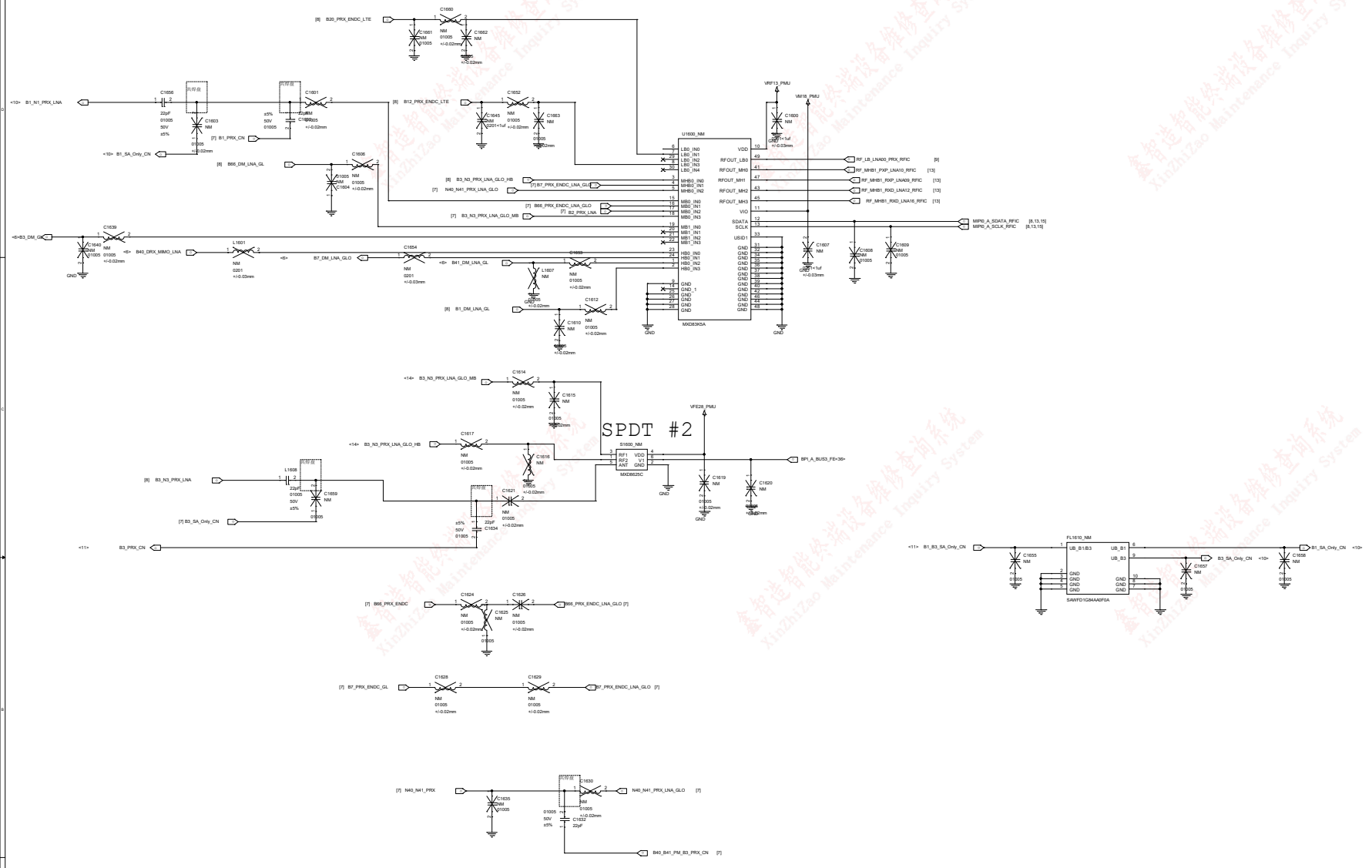
U1600_NM
MXD8365A
SPDT #2
S1600_NM
MXD8625C
FL1610_NM
SAWFD1G34A0F0A
VRF13_PMU
VM18_PMU
VFE26_PMU
MIPI0_A_SDATA_RFIC
MIPI0_A_SCLK_RFIC
RF_LB_LNA00_PRX_RFIC
RF_MHB1_PXP_LNA10_RFIC
RF_MHB1_R0D_LNA09_RFIC
RF_MHB1_R0D_LNA12_RFIC
RF_MHB1_R0D_LNA16_RFIC
B1_N1_PRX_LNA
B1_5A_Only_CN
B1_PRX_CN
B66_DM_LNA_GL
B20_PRX_ENDC_LTE
B12_PRX_ENDC_LTE
B3_N3_PRX_LNA_GLO_HB
B7_PRX_ENDC_LNA_GLO
N40_N41_PRX_LNA_GLO
B66_PRX_ENDC_LNA_GLO
B3_N3_PRX_LNA_GLO_MB
B2_PRX_LNA
B3_5A_Only_CN
B3_PRX_CN
B40_DRX_MIMO_LNA
B7_DM_LNA_GLO
B41_DM_LNA_GL
B1_DM_LNA_GL
B3_N3_PRX_LNA
BP1_A_BUS3_FE<36>
B1_B3_5A_Only_CN
B66_PRX_ENDC
B7_PRX_ENDC_GL
N40_N41_PRX
B40_B41_PM_B3_PRX_CN

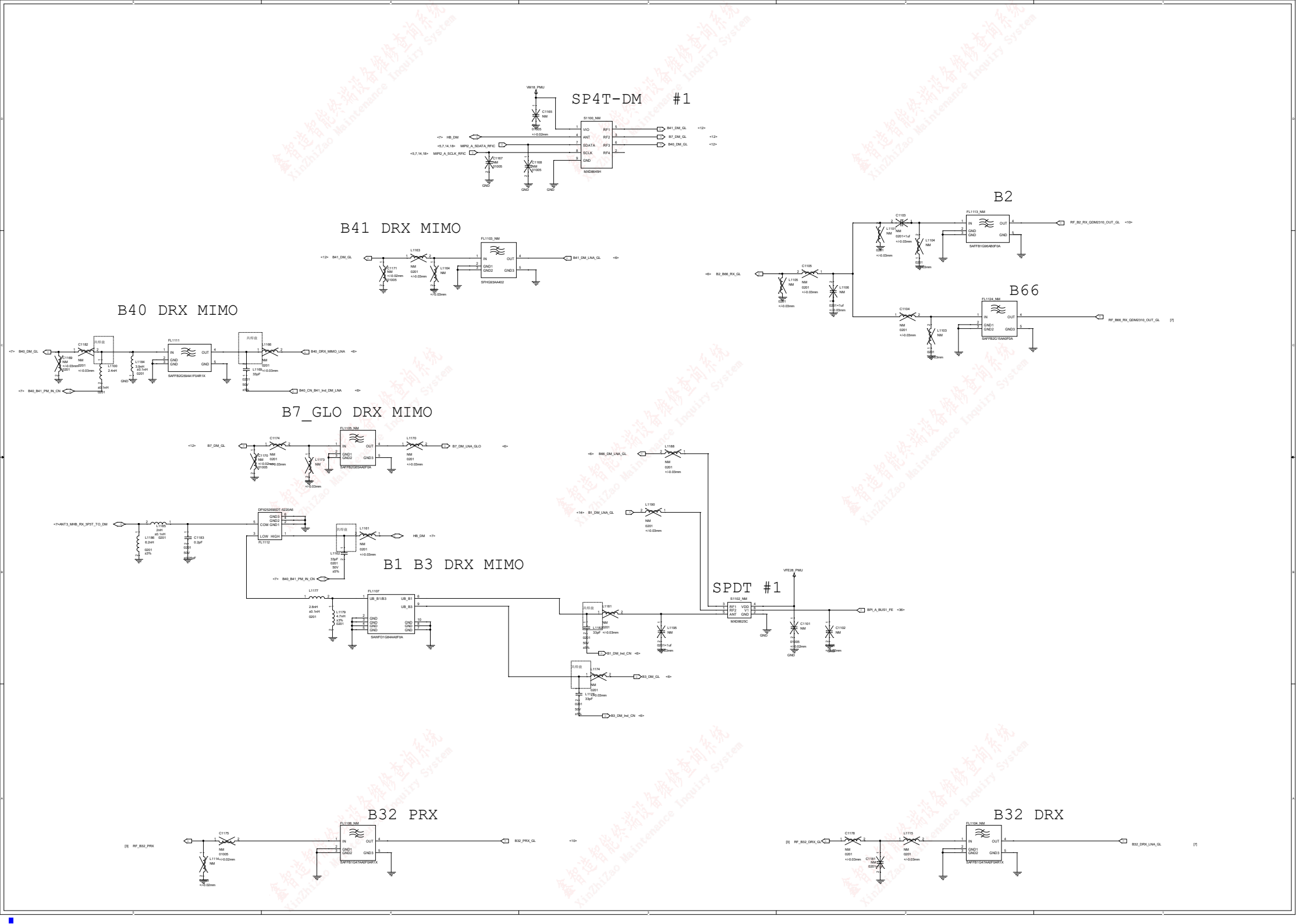
SP4T-DM #1
B41 DRX MIMO
B2
B66
B40 DRX MIMO
B7_GLO DRX MIMO
B1 B3 DRX MIMO
SPDT #1
B32 PRX
B32 DRX

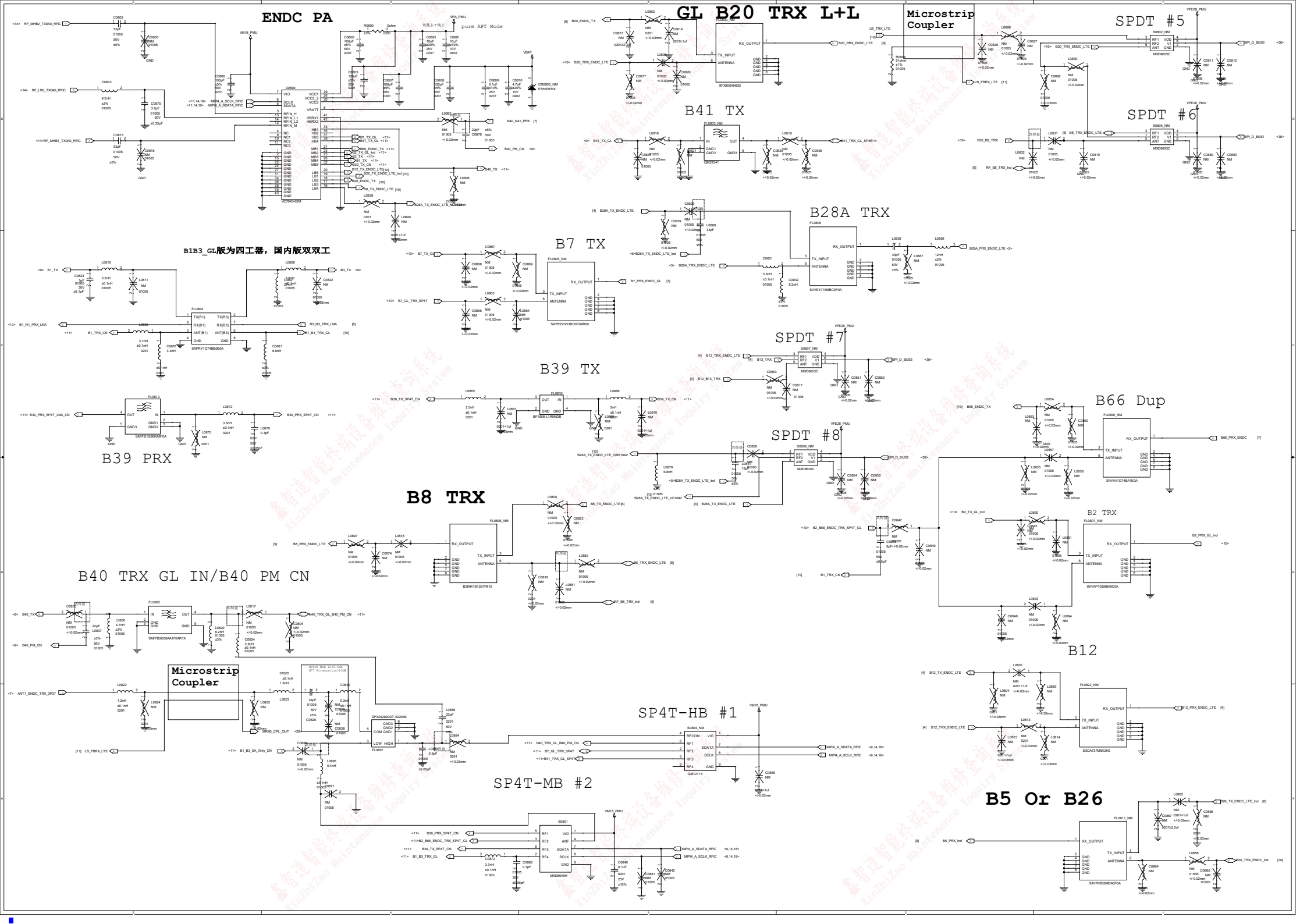
ENDC PA
pure APT Mode
GL B20 TRX L+L
Microstrip Coupler
SPDT #5
B41 TX
SPDT #6
B28A TRX
B1B3_GL版为四工器，国内版双双工
B7 TX
SPDT #7
B39 TX
B39 PRX
SPDT #8
B66 Dup
B8 TRX
B2 TRX
B40 TRX GL IN/B40 PM CN
B12
Microstrip Coupler
SP4T-HB #1
SP4T-MB #2
B5 Or B26

MHB PAMiD
GL QM77048B
CN QM77048E

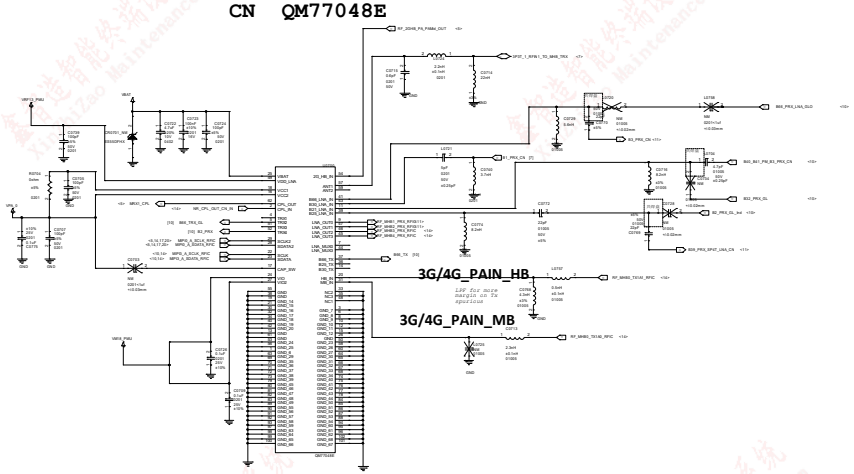

GL n66 Dup

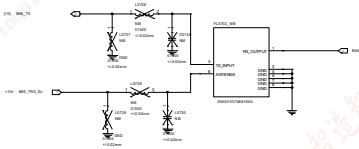

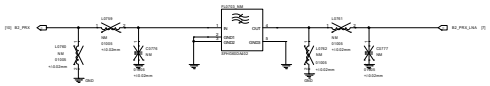

鑫智造智能终端设备维修查询系统
XinZhiZao Maintenance Inquiry System

Title	CHANGE	
Size	Document Number CHANGE	Rev
Custom		
Date:	Sheet 1 of 74	

Monday, June 27, 2022

ANT1 2345G LB2&MB3&HB3

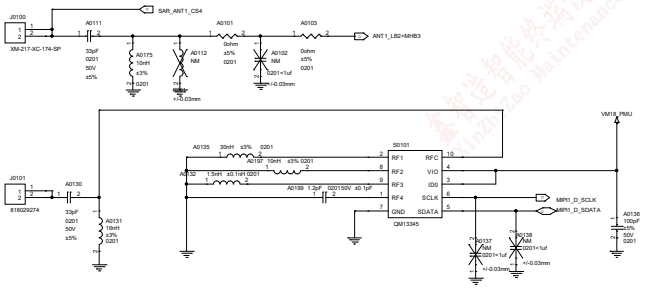

ANT2_2345G LB3&MHB2 B32 N78*3

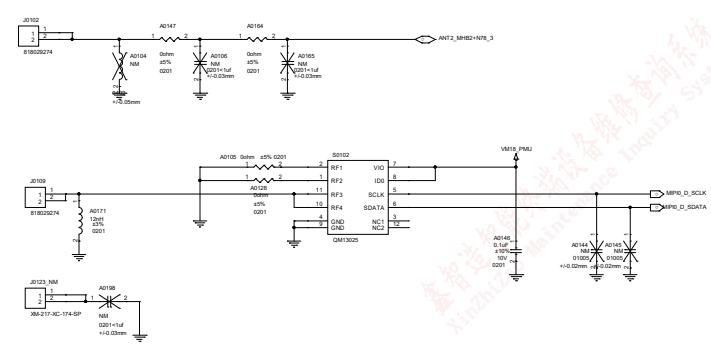

SAR SENSOR

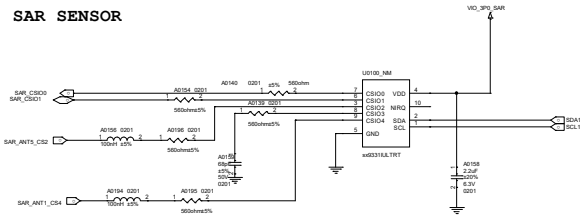

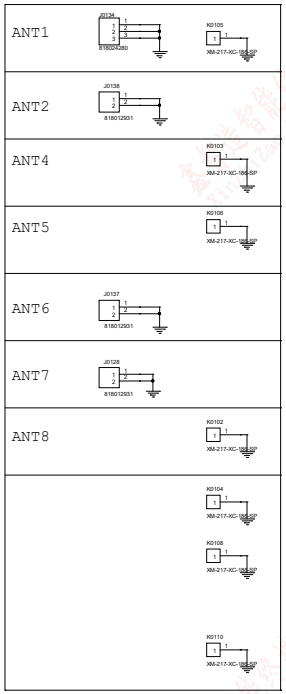

ANT4_ N78*2

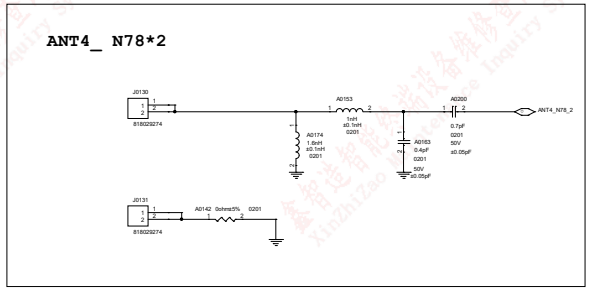

ANT5_B32+N78_1

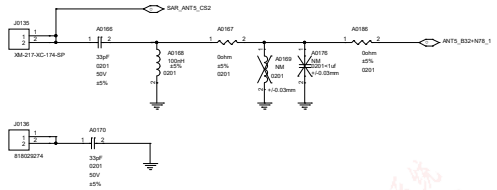

ANT6_ N78*4/B32

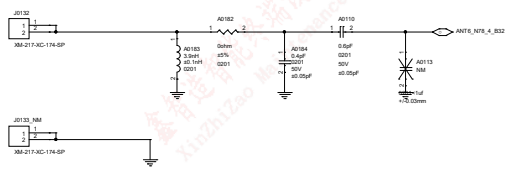

ANT7_Combo（GPSL1+WiFi CH0）

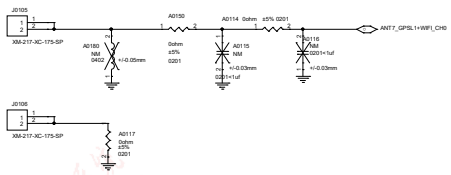

ANT8_WIFI CH1

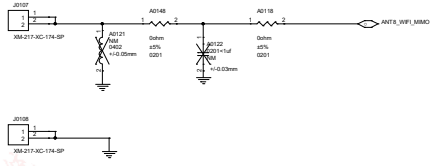

Title	G7A MAIN		
Size A1	Document Number <Doc>		Rev P1S
Date: Monday, August 29, 2022	Sheet 1 of 72		

鑫智造智能终端设备维修查询系统 XinZhiZao Maintenance Inquiry System

鑫智造智能终端设备维修查询系统
XinZhiZao Maintenance Inquiry System

Title	J11 MAIN	
Size A2	Document Number <Doc>	Rev P0
Date: Monday, June 27, 2022	Sheet 3 of 74	

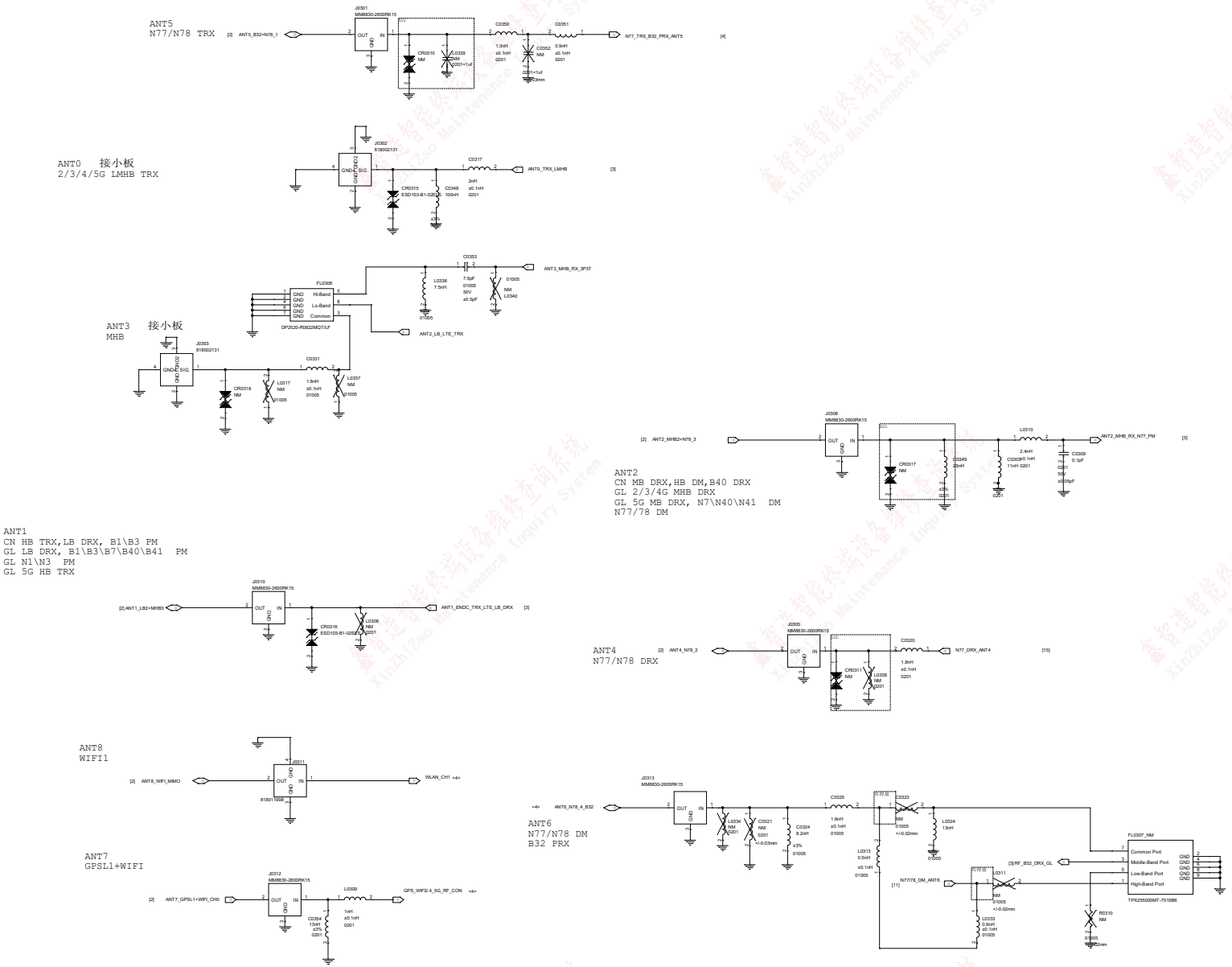

Title: J11 MAIN			
Size: A1	Document Number: <Doc>		Rev: P0
Date: Monday, June 27, 2022	Sheet 4 of 74		

鑫智造智能终端设备维修查询系统 XinZhiZao Maintenance Inquiry System

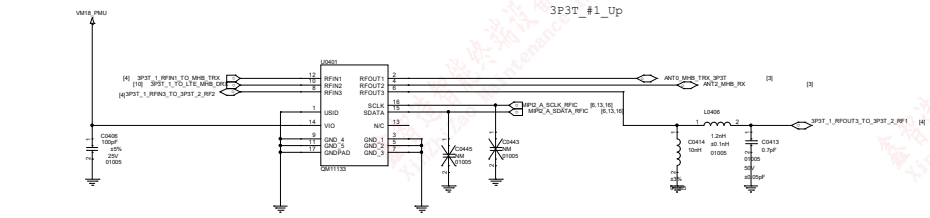

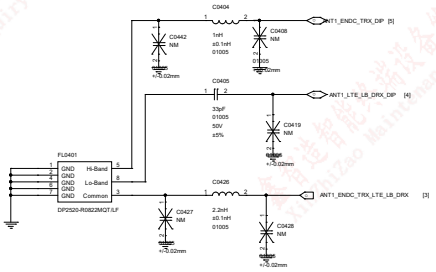

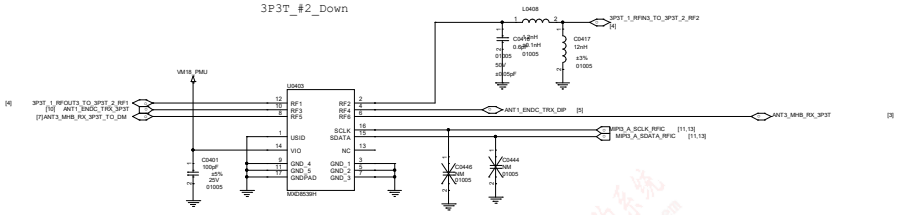

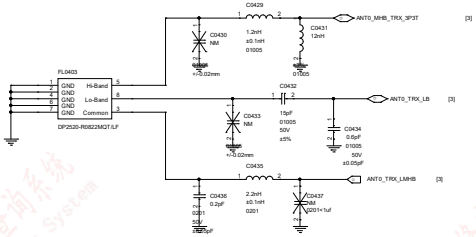

LB TAS DPDT #2

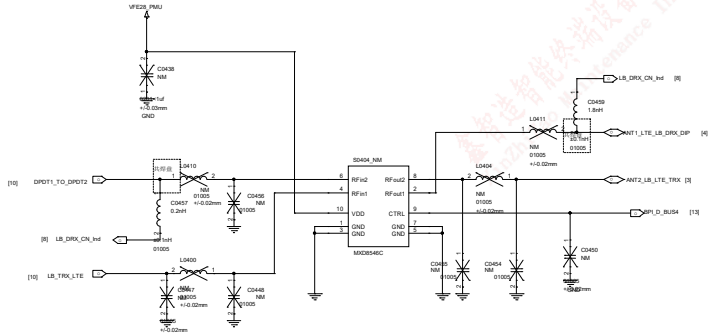

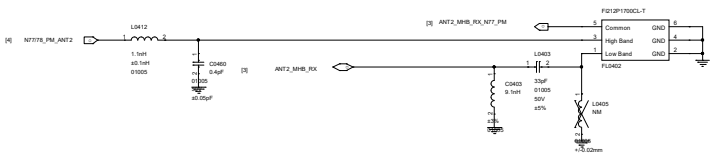

LB TAS DPDT #1

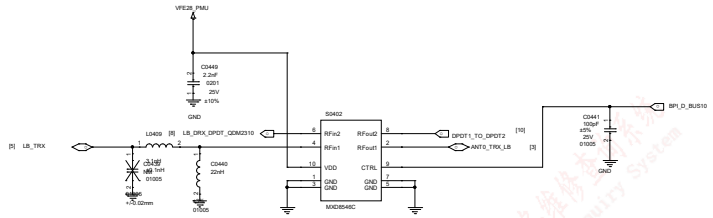

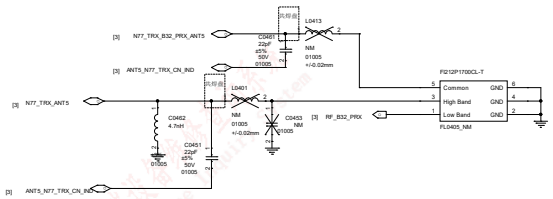

MI PHONE			
File: MT6983_SCL			
Size: A1	Document Number: SWITCH		Rev: P0
Date: Monday, June 27, 2022	Sheet 5 of 74		

鑫智造智能终端设备维修查询系统 XinZhiZao Maintenance Inquiry System

DiFEM QDM2310

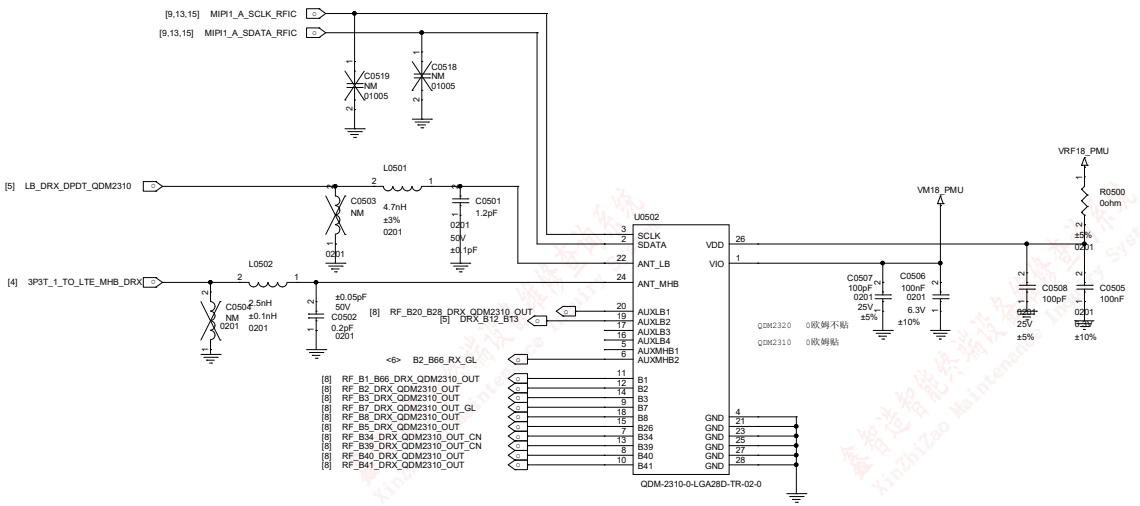

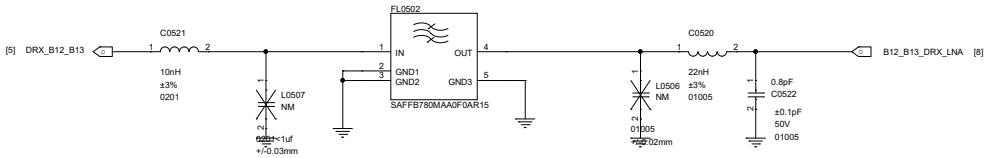

Title	MT6873_5GA	
Size	Document Number	Rev
A2	MT6893_GPIO_1	
Date:	Monday, June 27, 2022	Sheet 6 of 74

LB PAMiD

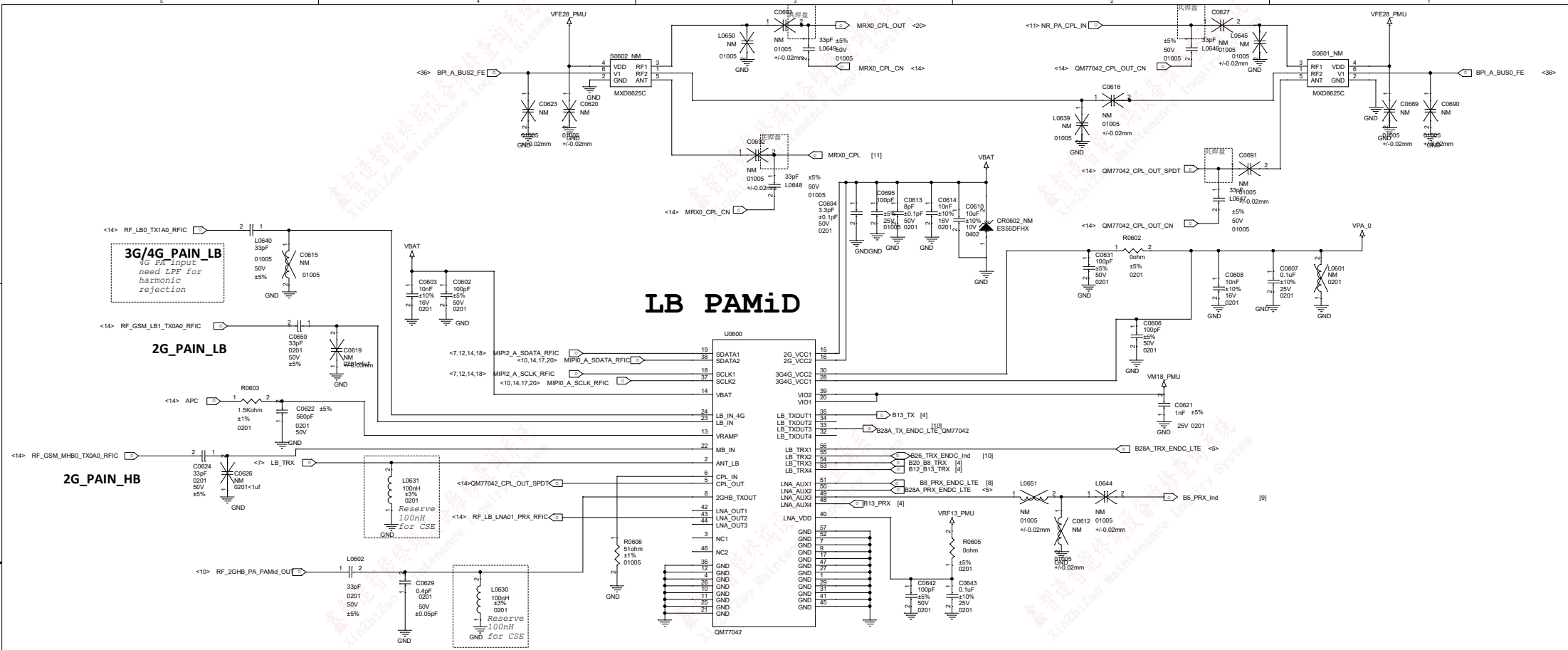

B13 band

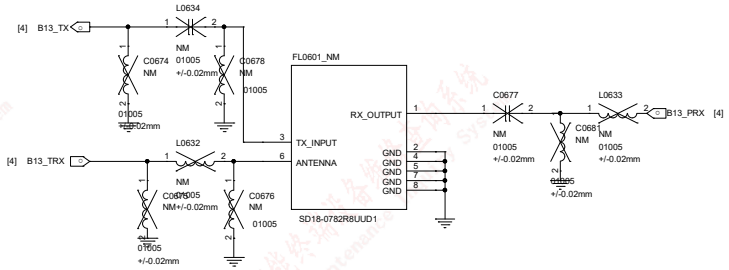

Title	MT6873_5GA
Size	Document Number
A2	MT6893_GPIO_1
Date:	Wednesday, August 10, 2022
Sheet	7 of 74

APT

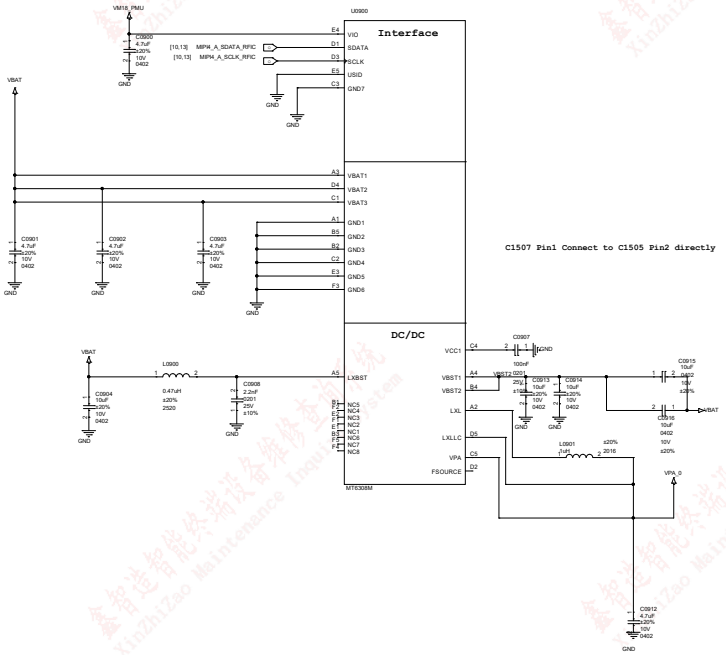

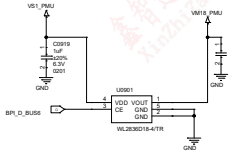

MI PHONE		
Title	MT6983_5GL	
Size A1	Document Number RF_5G_DCDC	Rev P0
Date: Monday, June 27, 2022	Sheet 10 of 74	

鑫智造智能终端设备维修查询系统
XinZhiZao Maintenance Inquiry System

Title	MI PHONE
File	MT6853_SCL
Size	A1
Document Number	PA_SC_M41
Rev	P0
Date	Monday, June 27, 2022
Sheet	11 of 74

鑫智造智能终端设备维修查询系统
XinZhiZao Maintenance Inquiry System

MI PHONE		
Title	MT6883_5GL	
Size A3	Document Number PA_5G_N41	Rev P0
Date: Monday, June 27, 2022	Sheet 13 of 74	

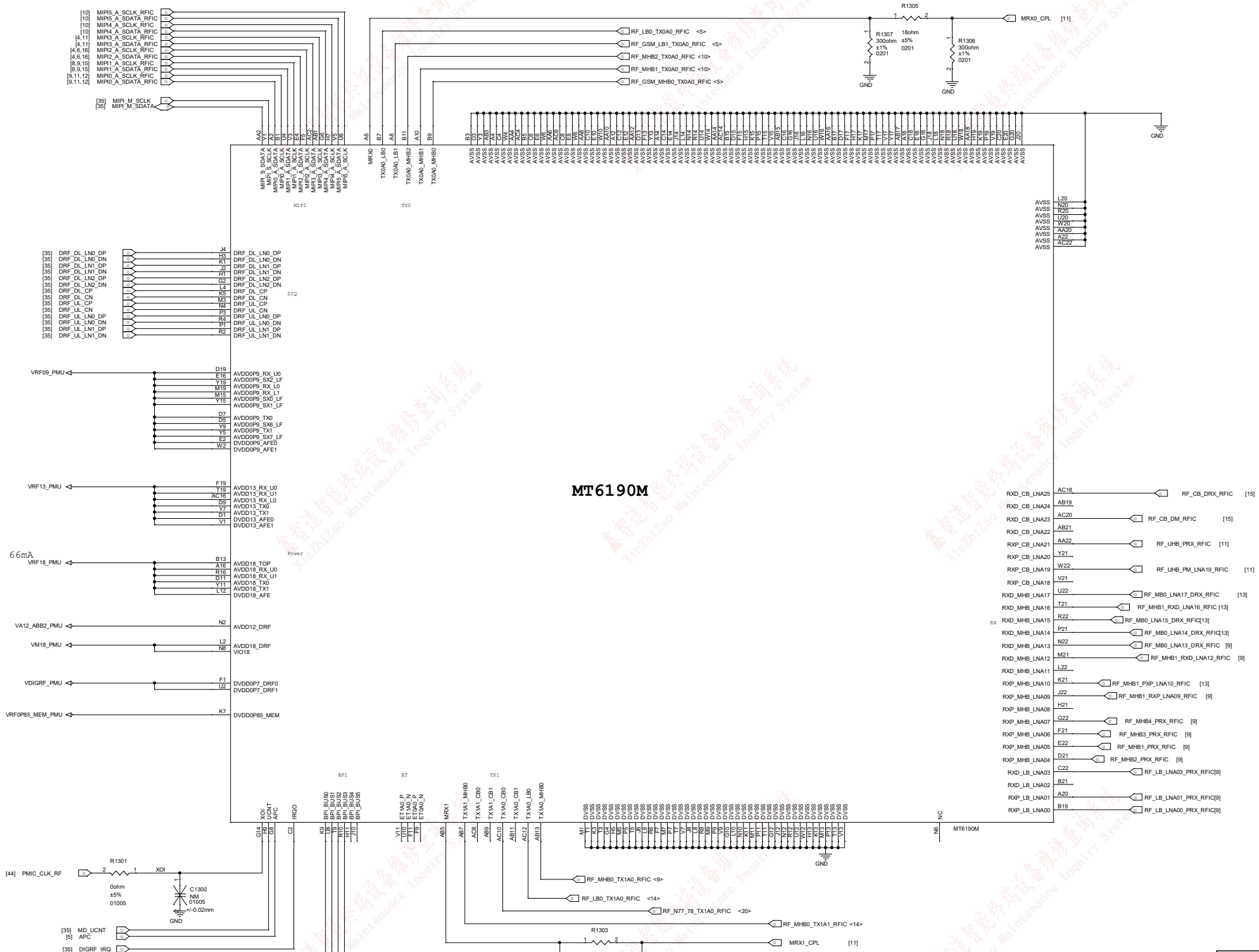

MI PHONE	
Title: MT6853	
Size: A2	Document Number: WTR Interface
Rev: P0	
Date: Monday, June 27, 2022	Sheet 14 of 74

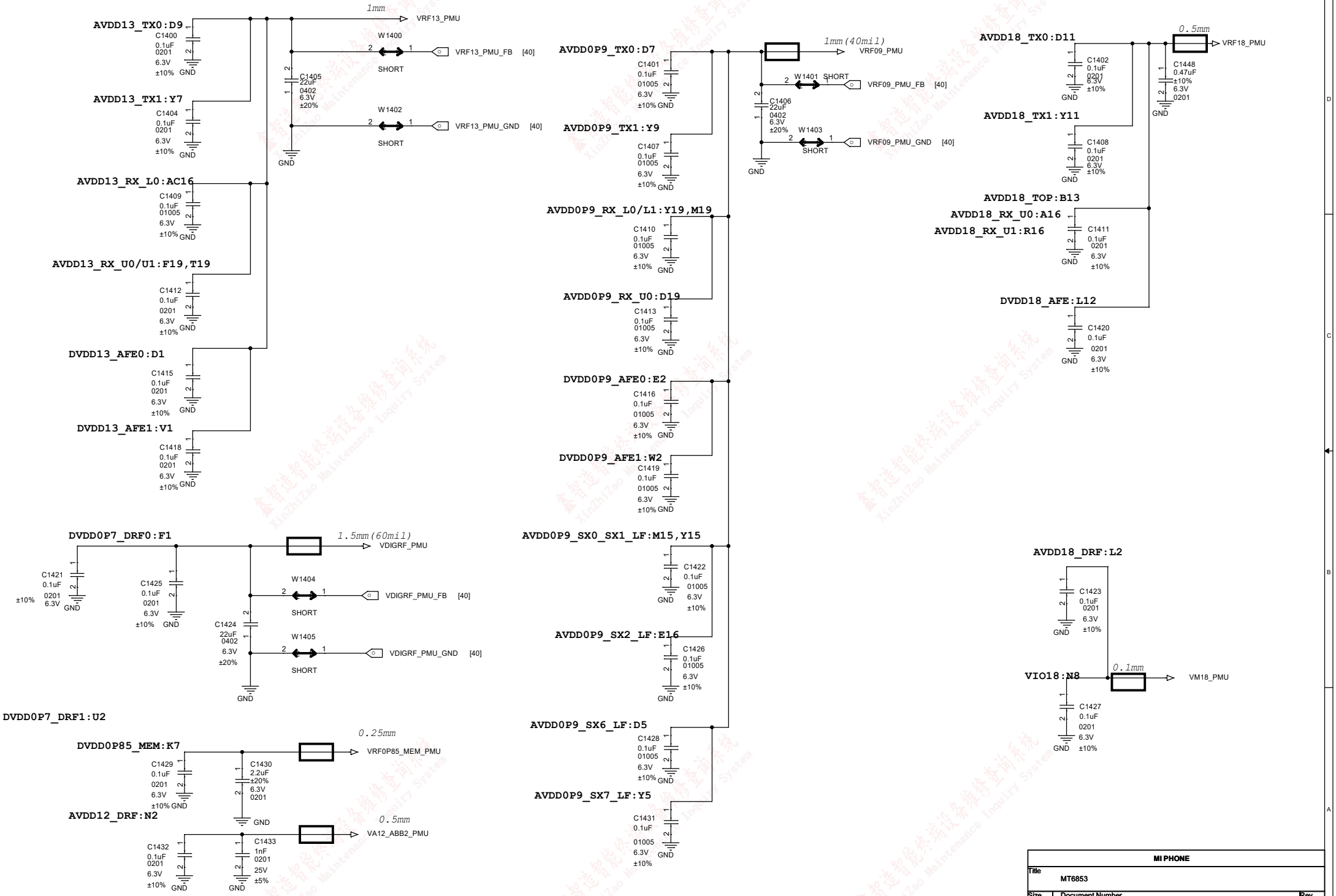

MI PHONE		
Title: MT6853		
Size: A3	Document Number: WTR PWR	Rev: P0
Date: Monday, June 27, 2022	Sheet 15 of 74	

鑫智造智能终端设备维修查询系统
XinZhiZao Maintenance Inquiry System

MI PHONE		
Title: MT6883_5GL		
Size: A2	Document Number: 5G_MIMO_LNA	Rev: P0
Date: Monday, June 27, 2022	Sheet 16 of 74	

鑫智造智能终端设备维修查询系统
XinZhiZao Maintenance Inquiry System

MI PHONE		
Title	K16_MAIN	
Size A3	Document Number Reserved(for 5G-sub 6G)	Rev P0
Date: Monday, June 27, 2022	Sheet 19 of 74	

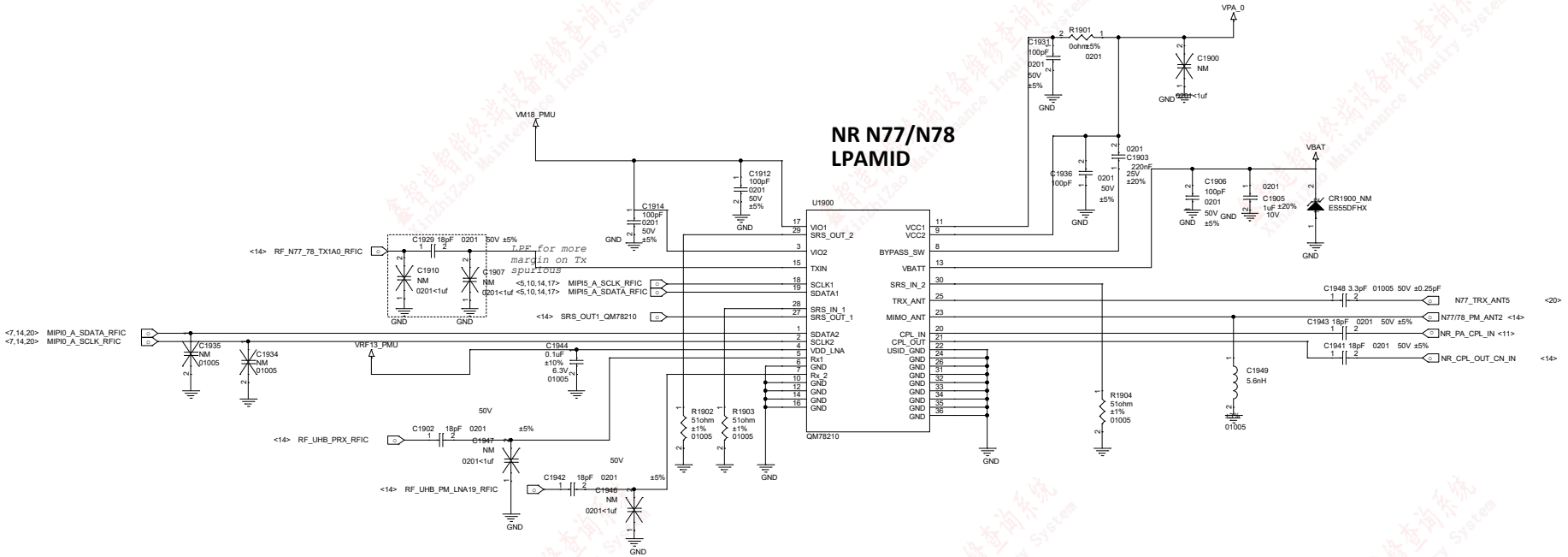

MI PHONE		
Title	MT6873_5GA	
Size A2	Document Number Reserved(for MM Wave)	Rev P0
Date: Monday, June 27, 2022	Sheet 20 of 74	

鑫智造智能终端设备维修查询系统
XinZhiZao Maintenance Inquiry System

MI PHONE		
Title	K16_MAIN	
Size A2	Document Number Reserved(for 5G-OTHERS)	Rev P0
Date: Monday, June 27, 2022	Sheet 22 of 74	

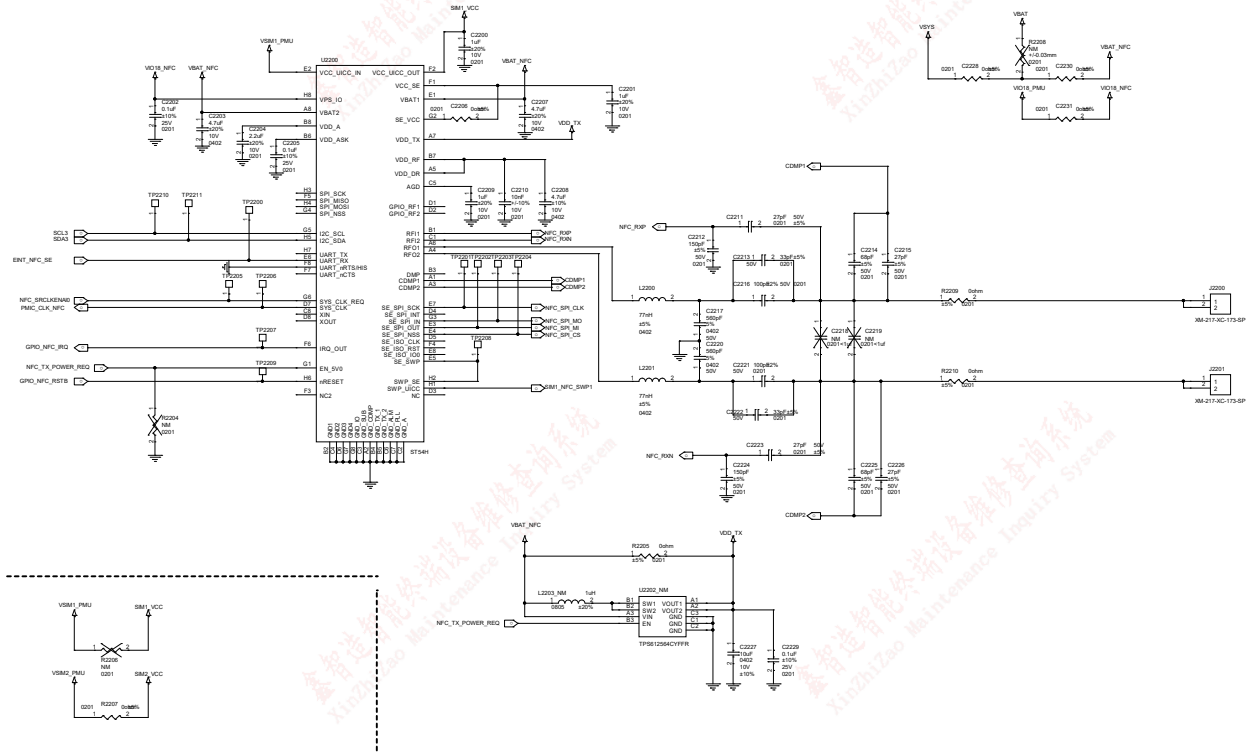

Title	K16_MAIN		
Size A1	Document Number NFC		Rev P0
Date: Wednesday, July 20, 2022	Sheet 23 of 74		

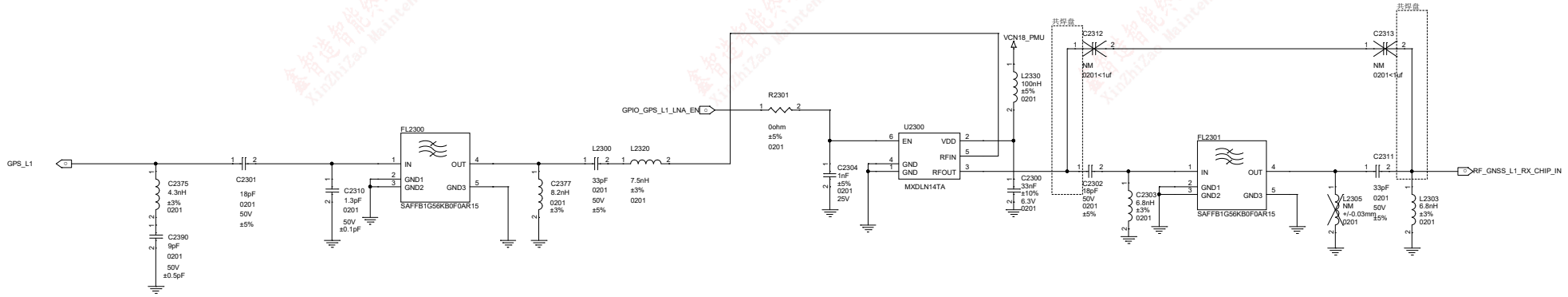

MI PHONE		
Title: MT6873_5GA		
Size: A2	Document Number: Reserved(for 5G-OTHERS)	Rev: P0
Date: Monday, August 01, 2022	Sheet 24 of 74	

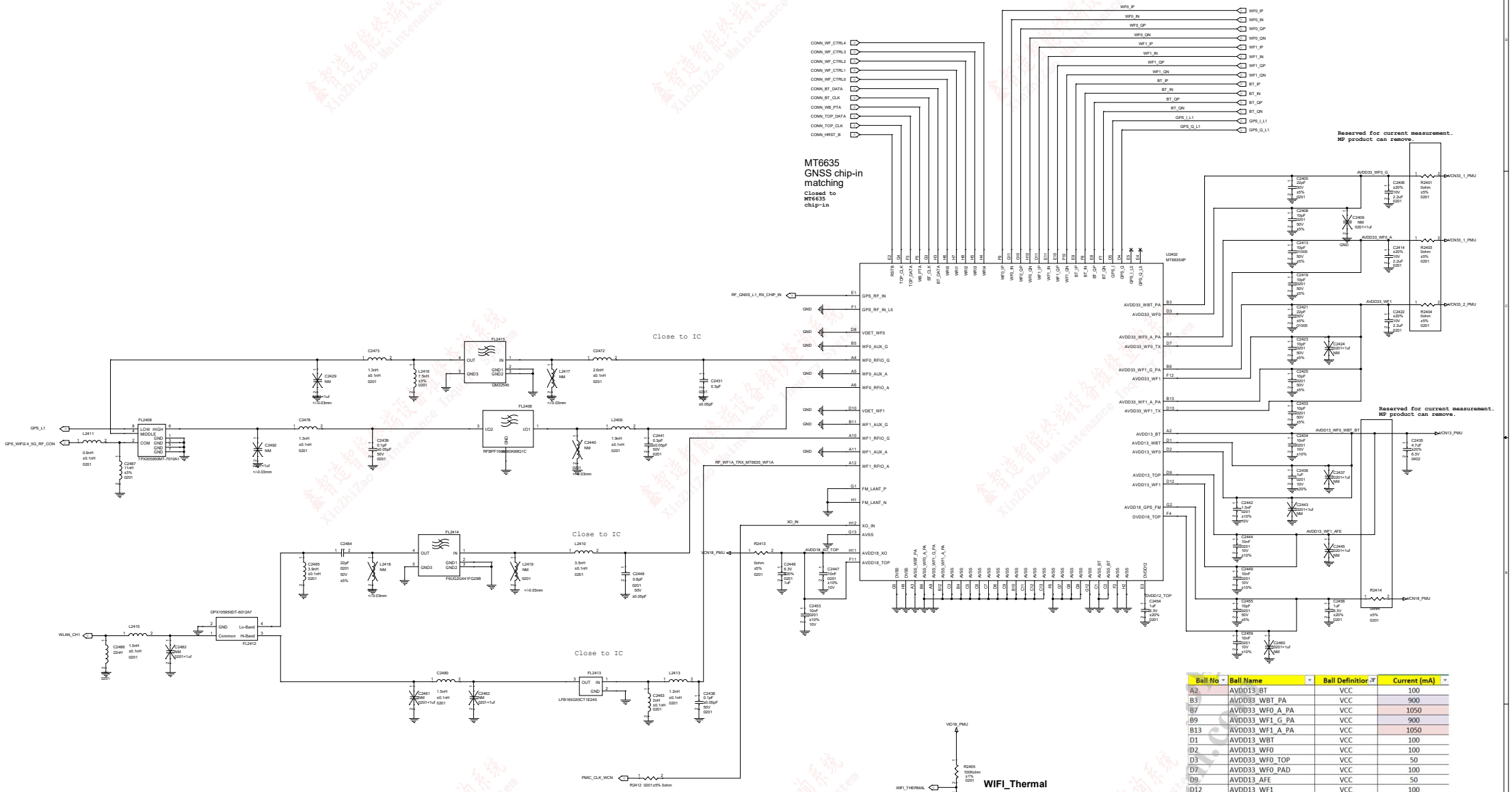

Ball No	Ball Name	Ball Definition	Current (mA)
A2	AVDD13_BT	VCC	100
B3	AVDD33_WBT_PA	VCC	900
B7	AVDD33_WF0_A_PA	VCC	1050
B9	AVDD33_WF1_G_PA	VCC	900
B13	AVDD33_WF1_A_PA	VCC	1050
D1	AVDD13_WBT	VCC	100
D2	AVDD13_WF0	VCC	100
D3	AVDD33_WF0_TOP	VCC	50
D7	AVDD33_WF0_PAD	VCC	100
D9	AVDD13_AFE	VCC	50
D12	AVDD13_WF1	VCC	100
D13	AVDD33_WF1_PAD	VCC	100
F4	DVDD18_TOP	VCC	100
F11	AVDD18_TOP	VCC	160
F12	AVDD33_WF1_TOP	VCC	50
G2	AVDD18_GPS_FM	VCC	50
H11	AVDD18_XO	VCC	10

MI PHONE			
File	MT6873_5GA		
Size	Document Number		Rev
A1	WIFI_Interface		
Date: Friday, July 01, 2022	Sheet 25	of 74	

鑫智造能终端设备维修查询系统 XinZhiZao Maintenance Inquiry System

鑫智造智能终端设备维修查询系统
XinZhiZao Maintenance Inquiry System

MI PHONE		
Title		
Size A2	Document Number Reserved(for WIFI FEM)	Rev P0
Date: Monday, June 27, 2022	Sheet 26 of 74	

鑫智造智能终端设备维修查询系统
XinZhiZao Maintenance Inquiry System

MI PHONE		
Title: MT6873_5GA		
Size: A3	Document Number: Reserved(WIFIdecoupling)	Rev: P0
Date: Monday, June 27, 2022	Sheet 27 of 74	

鑫智造智能终端设备维修查询系统
XinZhiZao Maintenance Inquiry System

MI PHONE		
Title	MT6873_5GA	
Size A3	Document Number Reserved(for 11ad/11ax)	Rev P0
Date: Monday, June 27, 2022	Sheet 28 of 74	

鑫智造智能终端设备维修查询系统
XinZhiZao Maintenance Inquiry System

MI PHONE		
Title	MT6873_5GA	
Size A3	Document Number Reserved(for 11ad/11ax)	Rev P0
Date: Monday, June 27, 2022	Sheet 29 of 74	

鑫智造智能终端设备维修查询系统
XinZhiZao Maintenance Inquiry System

MI PHONE		
Title: MT6873_5GA		
Size: A3	Document Number: Reserved(for Digital FM)	Rev: P0
Date: Monday, June 27, 2022	Sheet 30 of 74	

鑫智造智能终端设备维修查询系统
XinZhiZao Maintenance Inquiry System

MI PHONE		
Title	MT6873_5GA	
Size A3	Document Number Reserved(for Analog FM)	Rev P0
Date: Monday, June 27, 2022	Sheet 31 of 74	

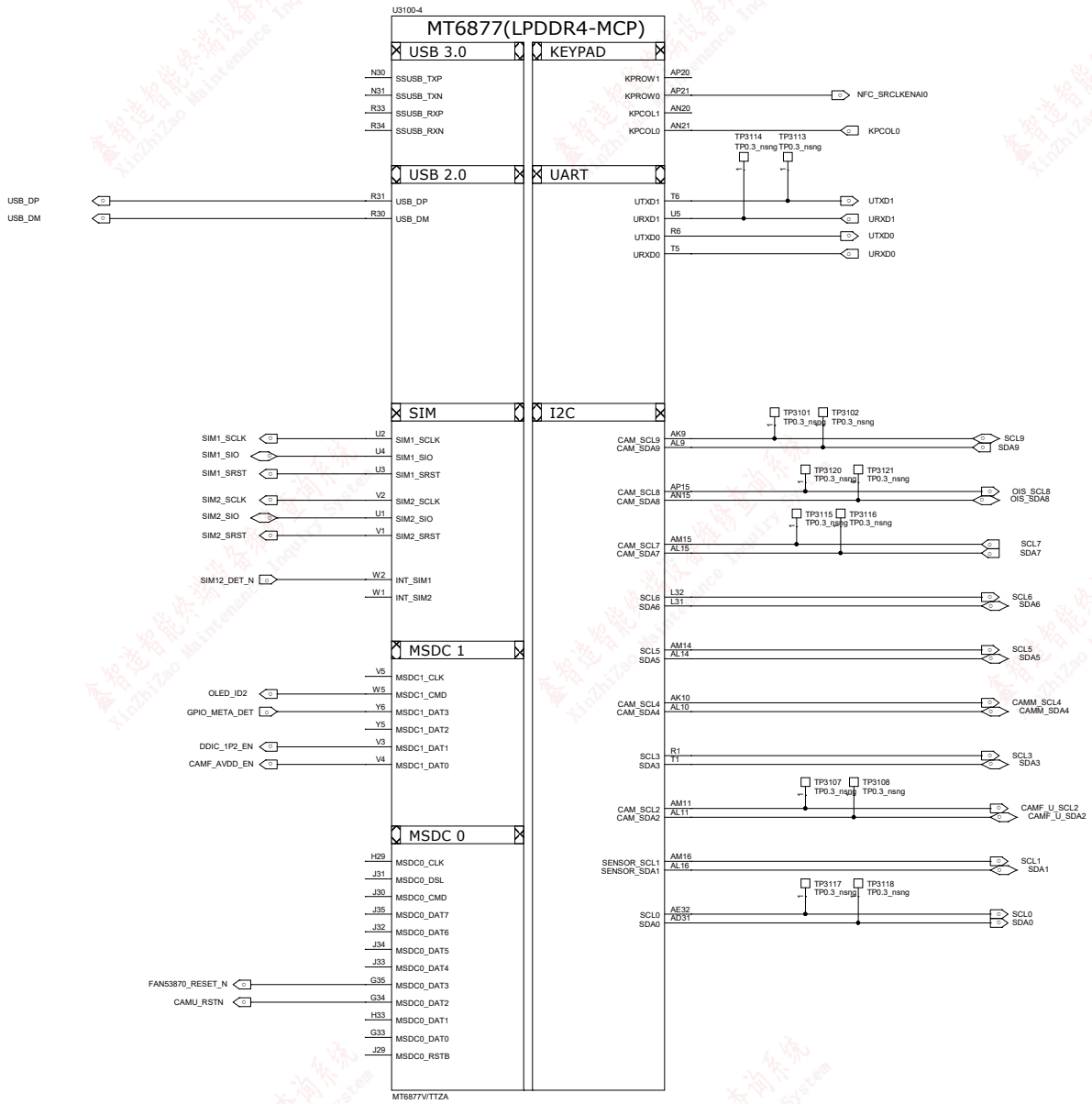

WIDE CAMERA

OIS

Smart PA1& 2 & MAIN CHARGER

P-sensor&L-sensor

MT6360

MICRO CAMERA

NFC

FRONT&ULtra Camera

Compass&SAR

CAMERA LDO & HAPTIC

Title	MT6877 GPIO-1		
Size A2	Document Number MT6877		Rev P0
Date: Tuesday, August 16, 2022	Sheet 32 of 74		

鑫智造智能终端设备维修查询系统 XinZhiZao Maintenance Inquiry System

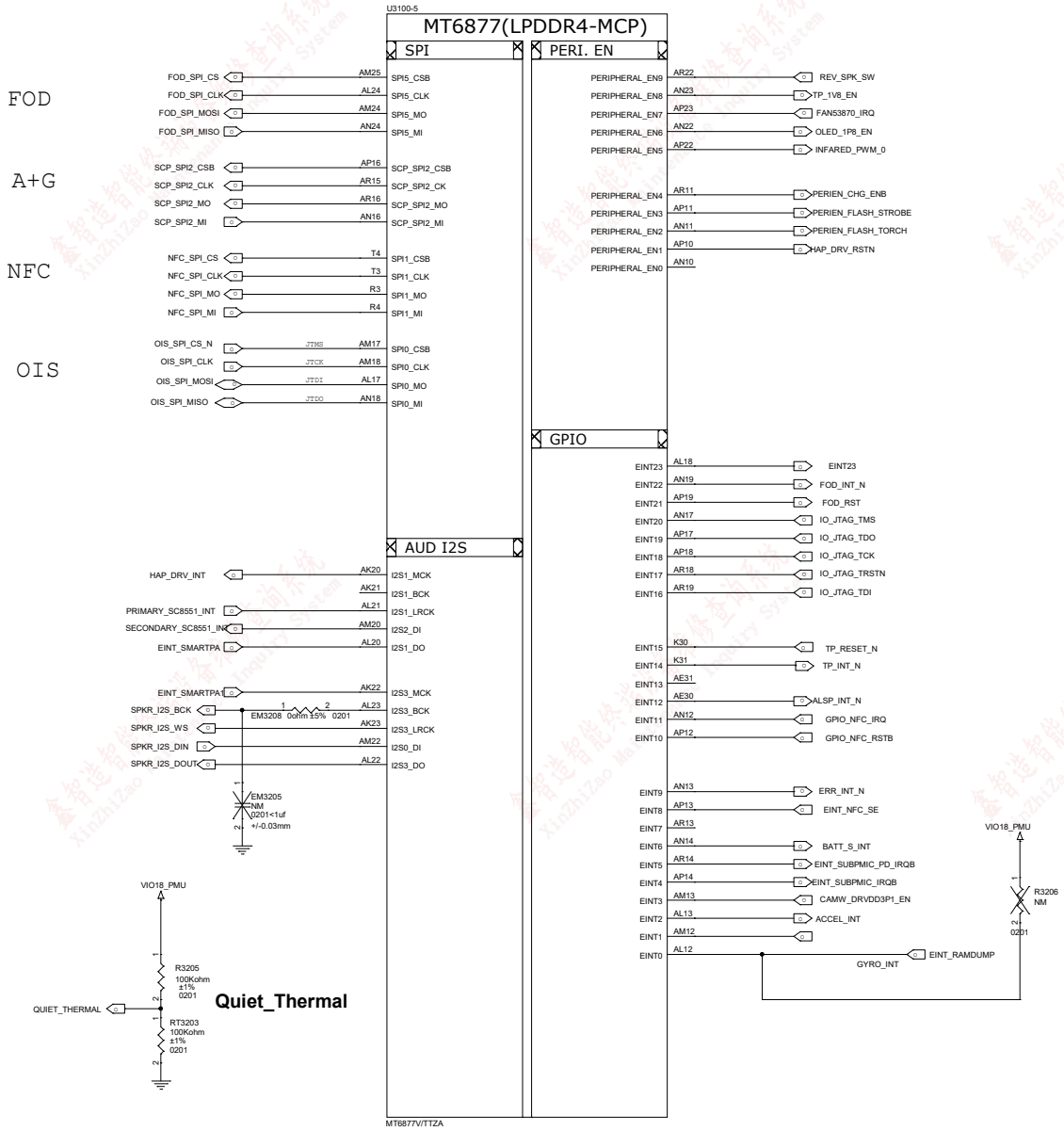

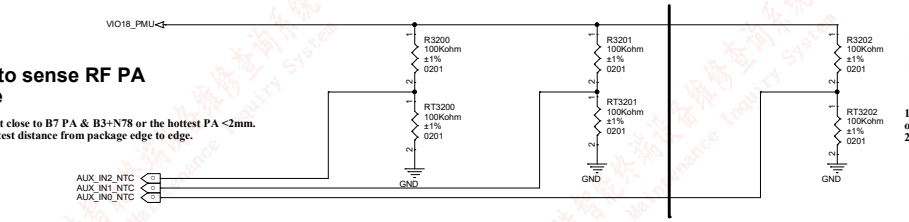

Thermistor to sense RF PA temperature

1. RT3200 & RT3201 must close to B7 PA & B3+N78 or the hottest PA <2mm.
2. The distance is the shortest distance from package edge to edge.

Thermistor to sense AP temperature

1. RT3202 must keep a distance about 6~8 mm away from AP and far from other heat sources 10 mm at least.
2. The distance is the shortest distance from package edge to edge.

Title	MT6877 GPIO-2	
Size A2	Document Number MT6877	Rev P0
Date: Monday, June 27, 2022	Sheet 33 of 74	

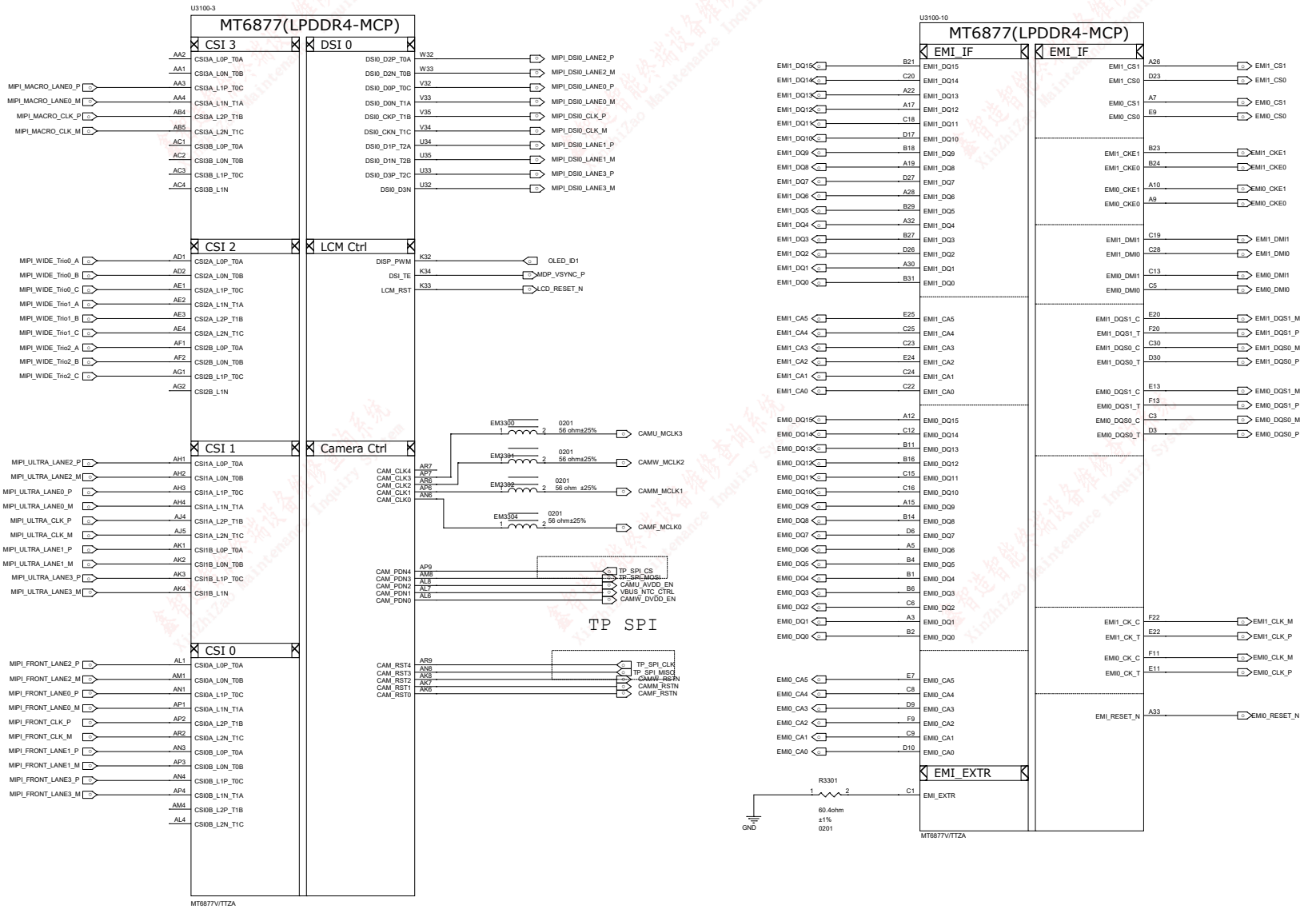

Title	MT6877 CAM LCM EMI	
Size C	Document Number MT6877	Rev P0
Date: Monday, June 27, 2022	Sheet 34 of 74	

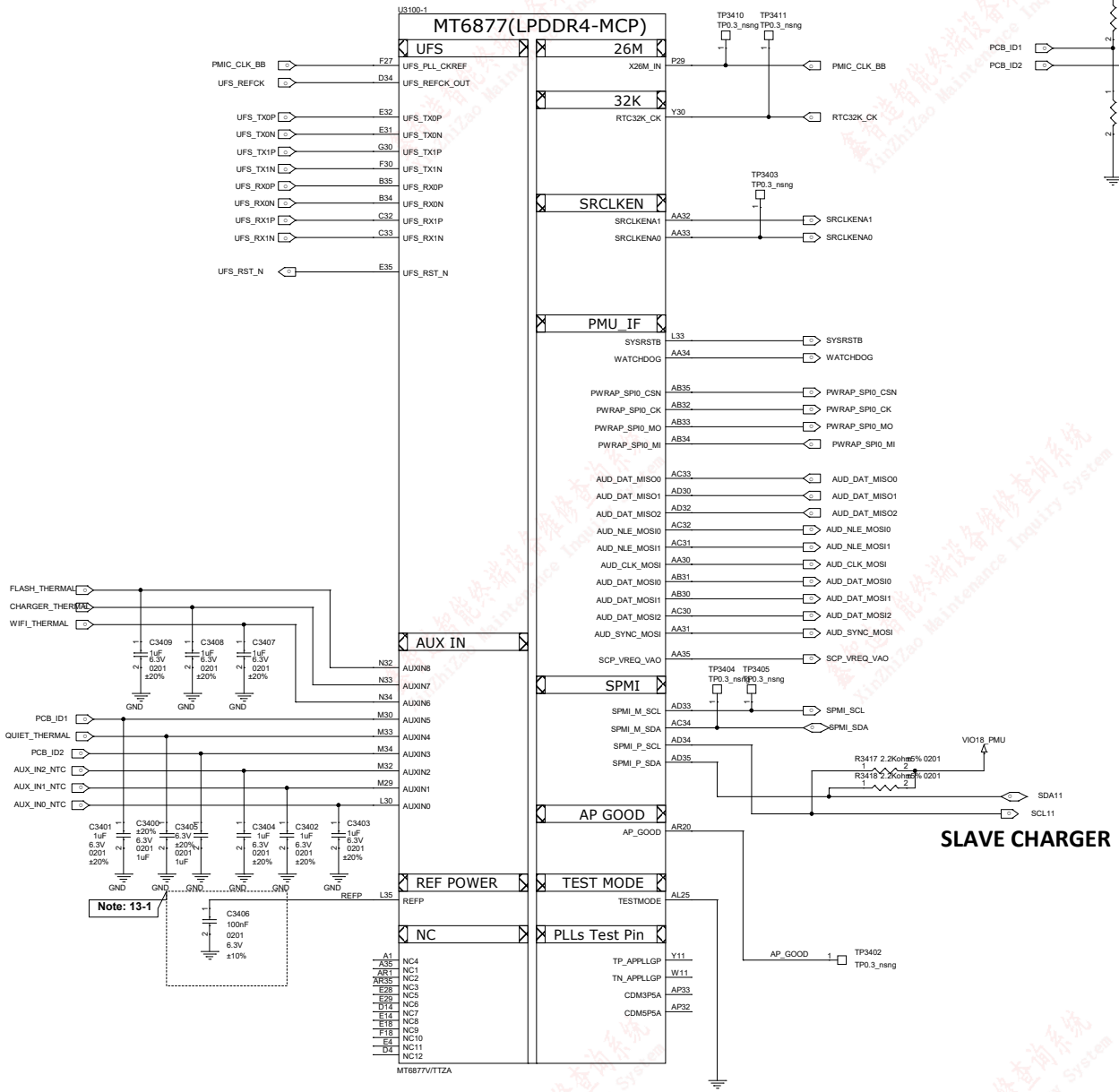

SLAVE CHARGER

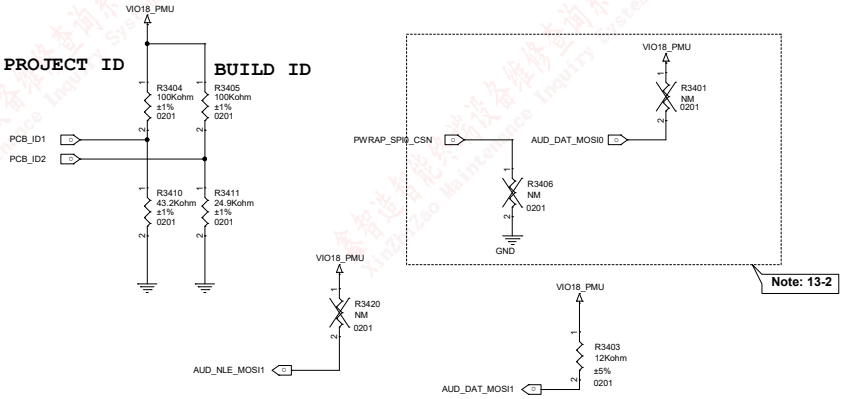

Schematic design notice:

Note 13-1: The load cap. have to be placed as close to REFP ball as possible.

Note 13-2: "PWRAP_SPI0_CSN" and "AUD_DAT_MOS0"I pin features in trapping pin to enable JTAG.

PWRAP_SPI0_CSN	AUD_DAT_MOSI0	AP JTAG	IO JTAG
H (Default)	L (Default)	N/A	N/A
H	H (by external PU)	SPI0_CSB, SPI0_CLK, SPI0_MO, SPI0_MI, DMIC_CLK	N/A
L (by external PD)	L	SPI0_CSB, SPI0_CLK, SPI0_MO, SPI0_MI, DMIC_CLK	TDM_LRCK/TDM_BCK/TDM_MCK/ TDM_DATA0/TDM_DATA1
L (by external PD)	H (by external PU)	MSDC1_CLK, MSDC1_CMD, MSDC1_DAT0, MSDC1_DAT1, MSDC1_DAT2	N/A

Note 13-3: "AUD_NLE_MOSI1" features in trapping pin to enable JTAG over USB 2.0 port.

AUD_NLE_MOSI1	USB JTAG
L (Default)	USB 2.0
H (by external PU)	DP/DM output JTAG

Note 13-4: "AUD_NLE_MOSI0" is trapping pin to select UFS booting only or eMMC booting only.

AUD_NLE_MOSI0	Storage Booting
L (Default)	UFS only
H (by external PU)	eMMC only

Title	MT6877 INTF	
Size A2	Document Number MT6877	Rev P0
Date: Monday, August 22, 2022	Sheet 35 of 74	

鑫智造智能终端设备维修查询系统 XinZhiZao Maintenance Inquiry System

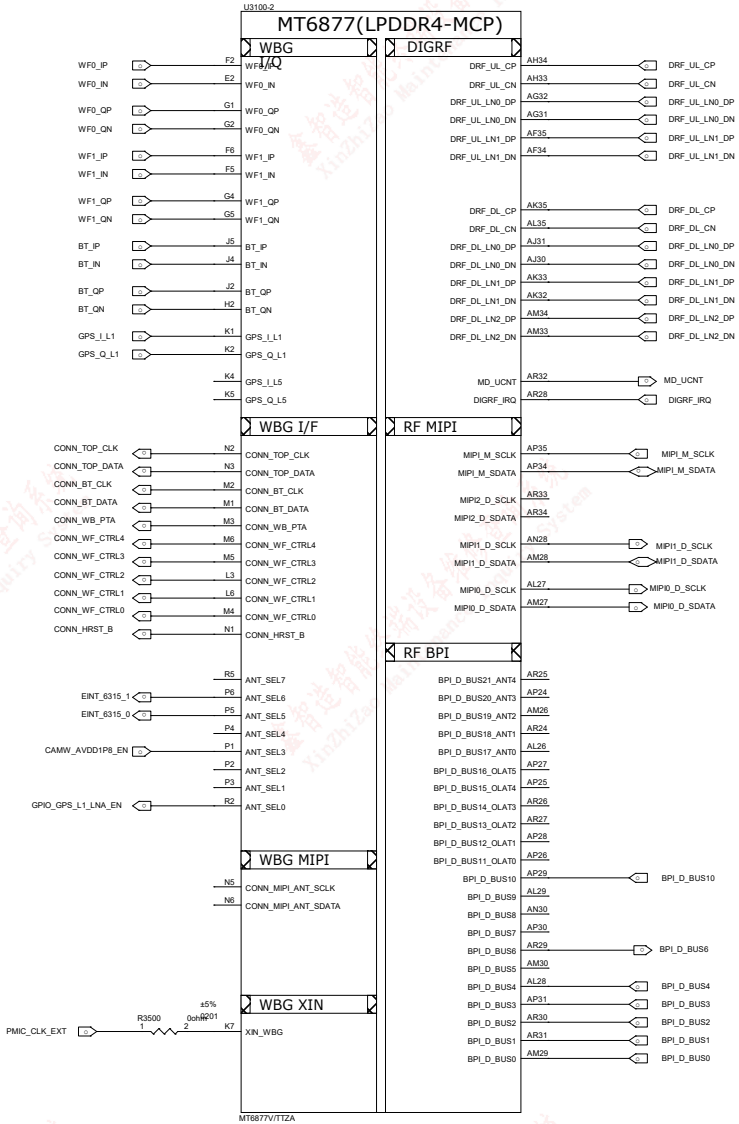

Title	MT6877 RF INTF	
Size C	Document Number MT6877	Rev P0
Date: Monday, June 27, 2022	Sheet 36 of 74	

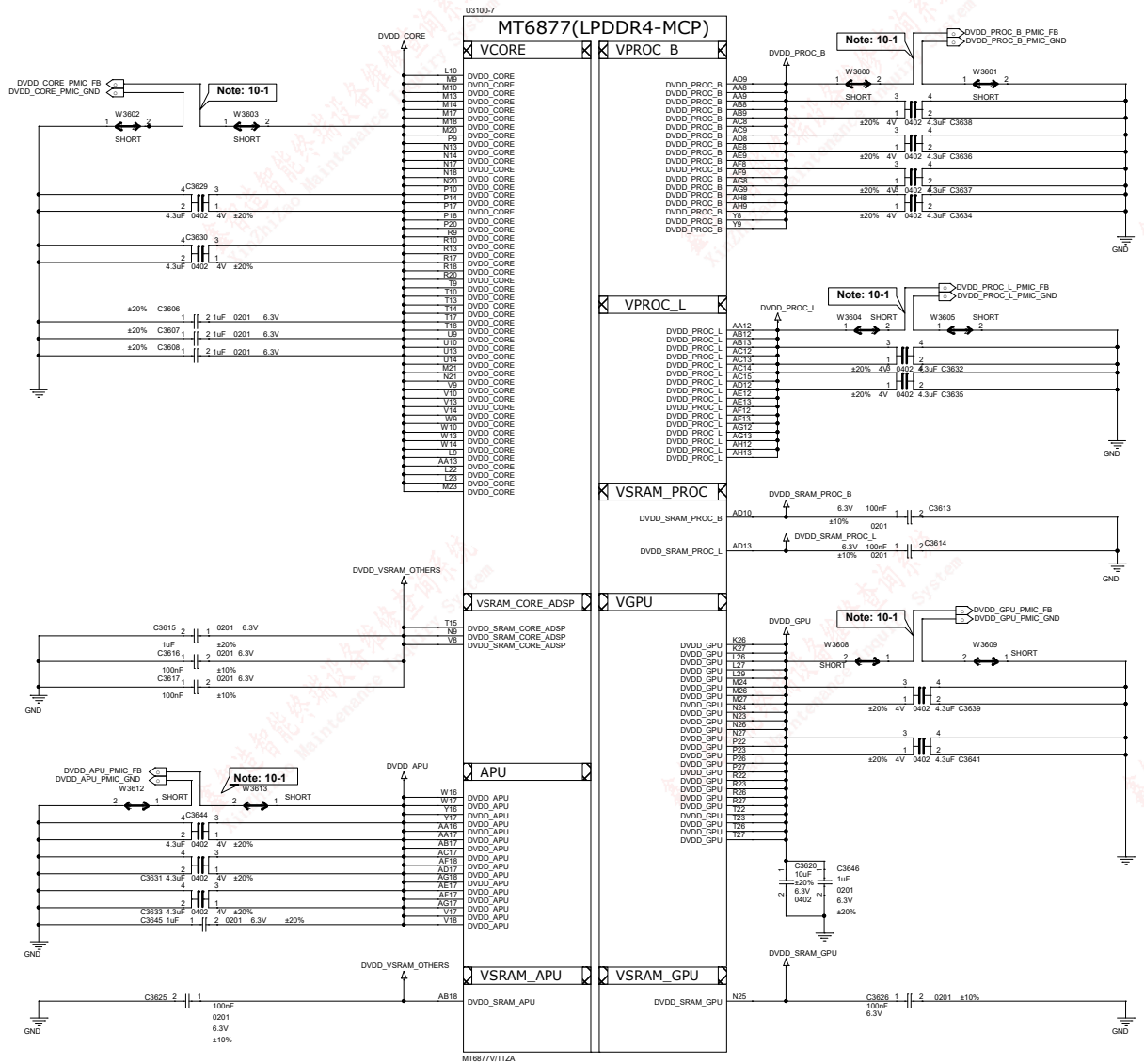

Schematic design notice of "10_BB_POWER_PDN" page.

Note 10-1: Differential pair of PMIC remote sense must be close to BB's ball.
Remote sense trace with GND shielding to PMIC (Differential)

Title	MT6873_5GA	
Size: C	Document Number: K16_MAIN	Rev
Date: Monday, June 27, 2022	Sheet 37 of 74	

鑫智造智能终端设备维修查询系统 XinZhiZao Maintenance Inquiry System

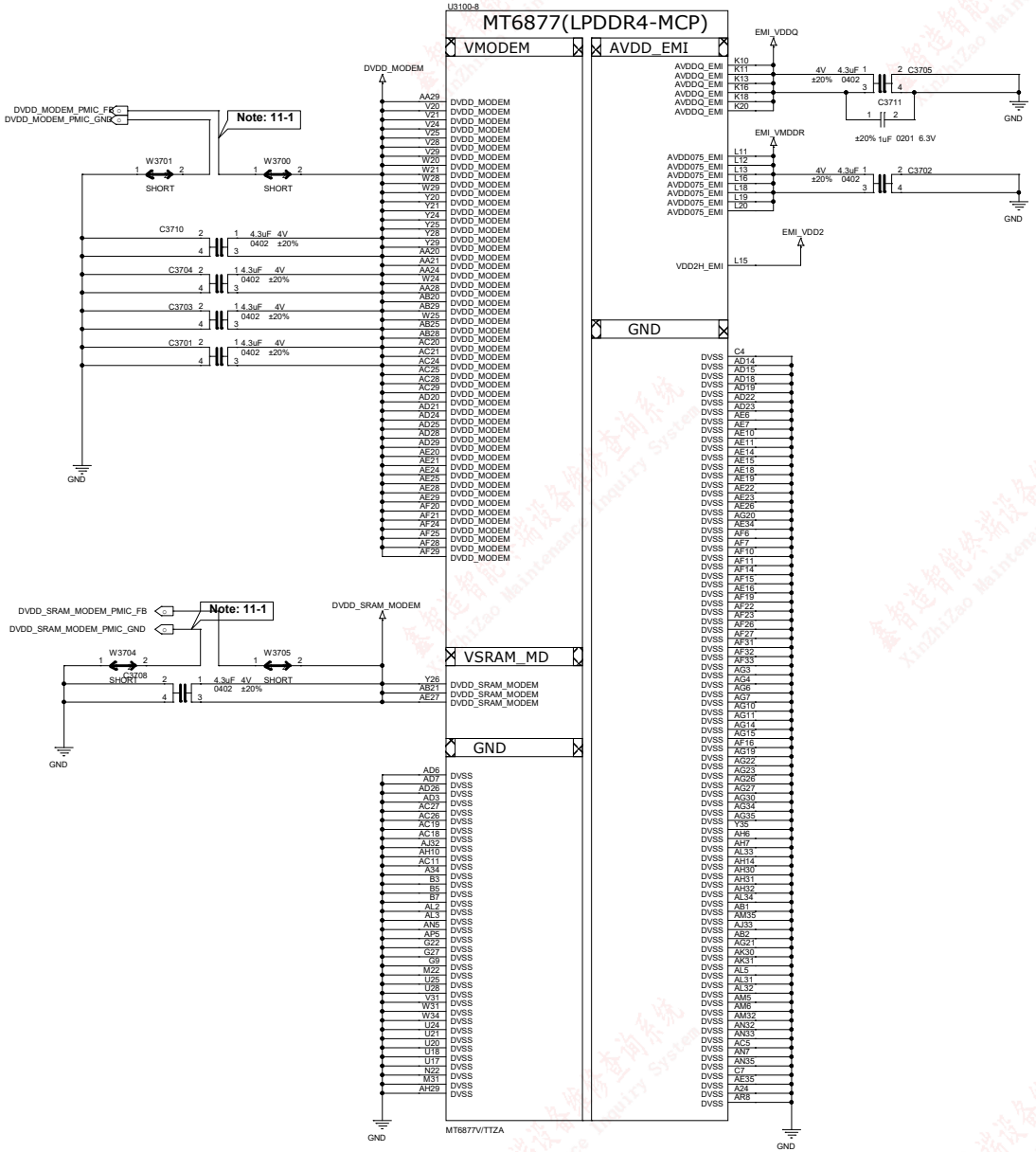

Schematic design notice of "11_BB_POWER_PDN" page.

Note 11-1: Differential pair of PMIC remote sense must be close to BB's ball.
Remote sense trace with GND shielding to PMIC (Differential)

Title	MT6873_5GA	
Size	Document Number	Rev
A2	K16_MAIN	
Date:	Monday, June 27, 2022	Sheet 38 of 74

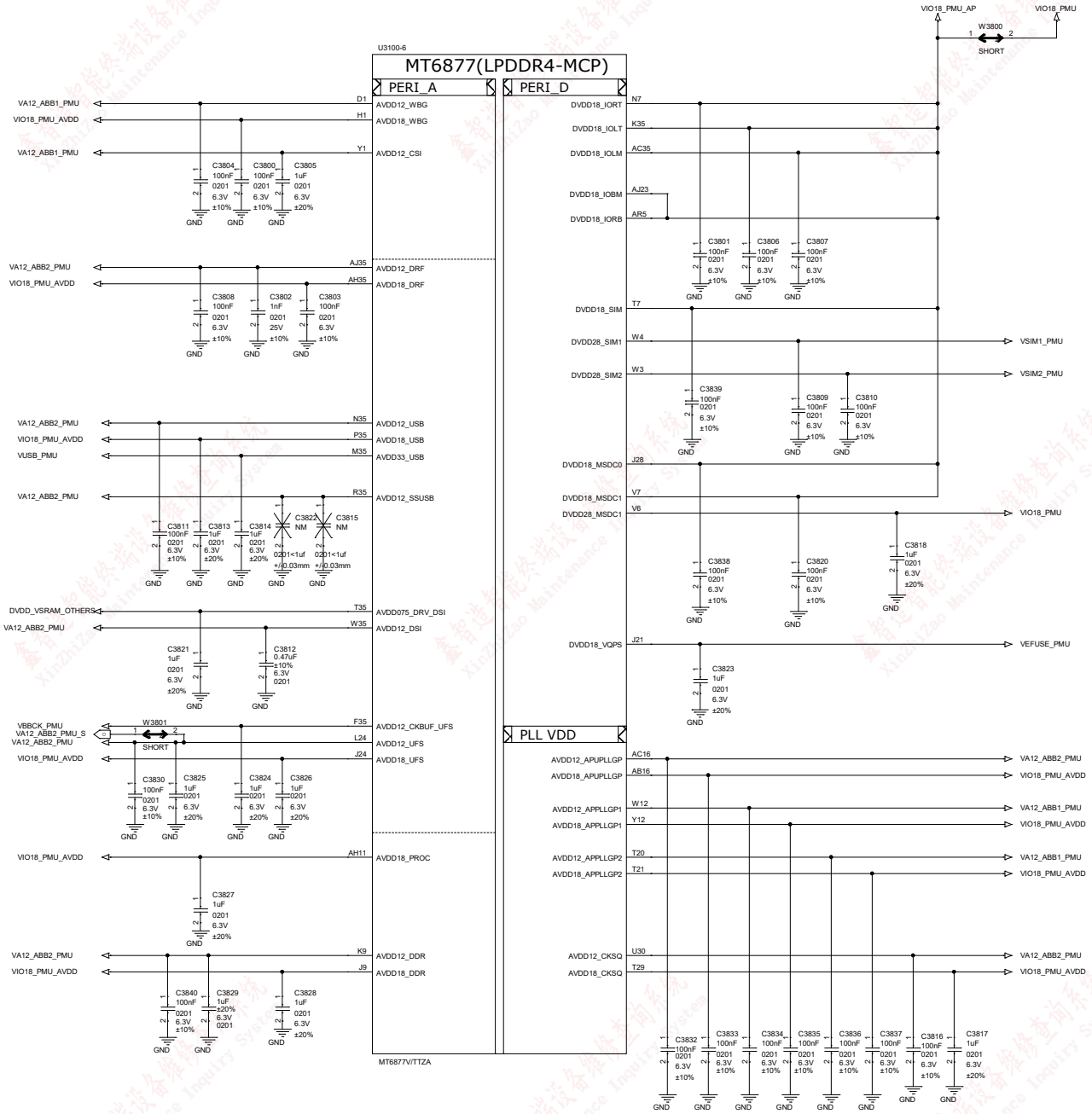

Title	MT6877 PWR3		
Size A2	Document Number MT6877		Rev P0
Date: Monday, June 27, 2022	Sheet 39 of 74		

U3100-9

MT6877(LPDDR4-MCP)

GND | GND

AC10	DVSS	DVSS	M25
B9	DVSS	DVSS	M28
B10	DVSS	DVSS	N4
B12	DVSS	DVSS	N8
B15	DVSS	DVSS	D7
B17	DVSS	DVSS	D24
B19	DVSS	DVSS	N15
B22	DVSS	DVSS	N16
B26	DVSS	DVSS	N19
B28	DVSS	DVSS	N28
B30	DVSS	DVSS	N29
B32	DVSS	DVSS	AJ1
B33	DVSS	DVSS	P7
C2	DVSS	DVSS	P8
C11	DVSS	DVSS	P11
C14	DVSS	DVSS	P12
C17	DVSS	DVSS	P15
C21	DVSS	DVSS	P16
C26	DVSS	DVSS	P19
C27	DVSS	DVSS	P21
C29	DVSS	DVSS	P24
C31	DVSS	DVSS	P25
C34	DVSS	DVSS	P30
C35	DVSS	DVSS	P31
D5	DVSS	DVSS	P33
D6	DVSS	DVSS	P34
D8	DVSS	DVSS	R7
D12	DVSS	DVSS	R8
D13	DVSS	DVSS	R11
D15	DVSS	DVSS	R15
D16	DVSS	DVSS	R19
D18	DVSS	DVSS	R24
D19	DVSS	DVSS	R25
D20	DVSS	DVSS	R28
D21	DVSS	DVSS	R29
D22	DVSS	DVSS	R32
D25	DVSS	DVSS	D29
D28	DVSS	DVSS	T8
D31	DVSS	DVSS	T11
D32	DVSS	DVSS	T12
D33	DVSS	DVSS	E12
E3	DVSS	DVSS	T16
E5	DVSS	DVSS	T19
E6	DVSS	DVSS	T24
E8	DVSS	DVSS	T25
E10	DVSS	DVSS	T30
E15	DVSS	DVSS	T31
E17	DVSS	DVSS	T33
E21	DVSS	DVSS	T34
E23	DVSS	DVSS	U8
E26	DVSS	DVSS	U9
E30	DVSS	DVSS	U11
E33	DVSS	DVSS	U12
E34	DVSS	DVSS	U15
AG24	DVSS	DVSS	U16
F4	DVSS	DVSS	U19
F7	DVSS	DVSS	H7
F8	DVSS	DVSS	U23
F10	DVSS	DVSS	U26
F12	DVSS	DVSS	AC7
F15	DVSS	DVSS	U31
F16	DVSS	DVSS	V11
F19	DVSS	DVSS	V12
F21	DVSS	DVSS	V15
F23	DVSS	DVSS	V16
F25	DVSS	DVSS	V19
F28	DVSS	DVSS	V22
F29	DVSS	DVSS	V23
F31	DVSS	DVSS	V26
F32	DVSS	DVSS	V27
F33	DVSS	DVSS	W7
F34	DVSS	DVSS	W15
G3	DVSS	DVSS	W18
G28	DVSS	DVSS	W19
G31	DVSS	DVSS	W22
H3	DVSS	DVSS	W23
H5	DVSS	DVSS	W26
H20	DVSS	DVSS	W27
H21	DVSS	DVSS	W30
H22	DVSS	DVSS	AJ2
H30	DVSS	DVSS	Y2
H31	DVSS	DVSS	Y3
J11	DVSS	DVSS	Y4
J12	DVSS	DVSS	Y7
J13	DVSS	DVSS	Y10
J14	DVSS	DVSS	Y14
J16	DVSS	DVSS	Y15
J19	DVSS	DVSS	Y18
J20	DVSS	DVSS	Y19
AG16	DVSS	DVSS	Y22
K29	DVSS	DVSS	Y23
K3	DVSS	DVSS	Y31
K6	DVSS	DVSS	AJ7
K12	DVSS	DVSS	AA5
AC2	DVSS	DVSS	AA6
K14	DVSS	DVSS	AA7
C10	DVSS	DVSS	AA10
K17	DVSS	DVSS	AA11
K19	DVSS	DVSS	AA14
K21	DVSS	DVSS	AA15
AN34	DVSS	DVSS	AA18
K24	DVSS	DVSS	AA19
K25	DVSS	DVSS	AA22
K28	DVSS	DVSS	AA23
L1	DVSS	DVSS	AA26
L2	DVSS	DVSS	AA27
L5	DVSS	DVSS	AJ8
L7	DVSS	DVSS	AB6
L8	DVSS	DVSS	H6
L21	DVSS	DVSS	AB10
L25	DVSS	DVSS	AB11
L28	DVSS	DVSS	AB14
AF3	DVSS	DVSS	AB15
M7	DVSS	DVSS	AB19
M8	DVSS	DVSS	AB22
M11	DVSS	DVSS	AB23
M12	DVSS	DVSS	AB26
M15	DVSS	DVSS	AB27
M16	DVSS	DVSS	AK5
M19	DVSS	DVSS	W8
AG25	DVSS	DVSS	Y27
AG28	DVSS	DVSS	AD27
E19	DVSS	DVSS	AM2
E27	DVSS	DVSS	AN2
F14	DVSS	DVSS	AR3
F24	DVSS	DVSS	AR4
R12	DVSS	DVSS	J8
R16	DVSS	DVSS	K8
R21	DVSS	DVSS	AD11
U7	DVSS	DVSS	E1
H8	DVSS	DVSS	G11
J6	DVSS	DVSS	G13
AG29	DVSS	DVSS	G18
AJ29	DVSS	DVSS	G20
AK34	DVSS	DVSS	AK29
	DVSS	DVSS	

MT6877V/ITZA

GND GND

Title	MT6877 GND		
Size C	Document Number MT6877		Rev P0
Date: Monday, June 27, 2022	Sheet 40 of 74		

鑫智造智能终端设备维修查询系统 XinZhiZao Maintenance Inquiry System

ALL C out Close to SOC

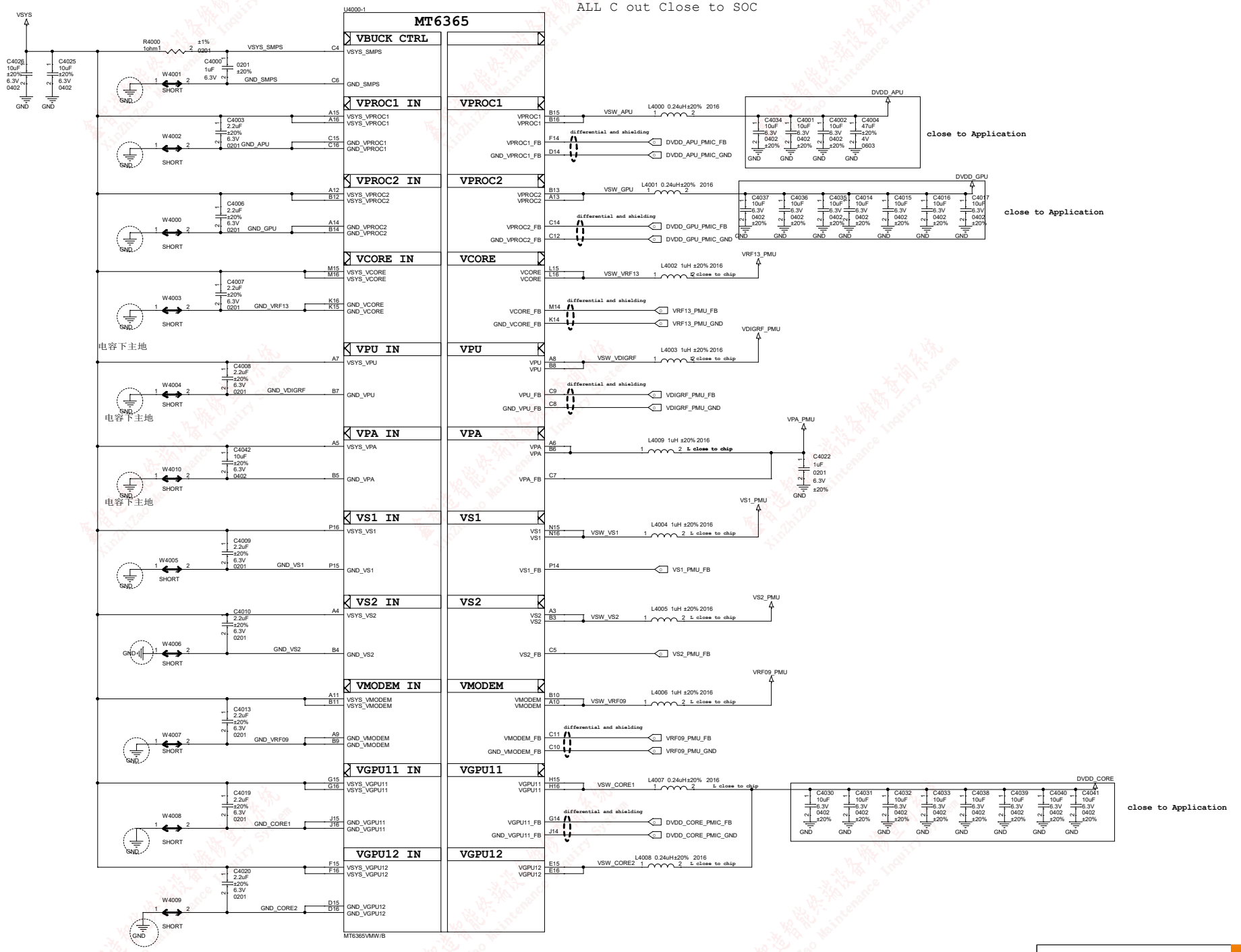

Title	MT6365 BUCK		
Size A2	Document Number MT6877		Rev P0
Date: Monday, June 27, 2022	Sheet 41 of 74		

1. "Typical Cap" defined in design notice is the minimum cap. to LDO Cout.
2. NC cap can move to application, if (PCB L<20nH, PCB R<0.2mohm)
=> value and placement of Cap, please refer design notice

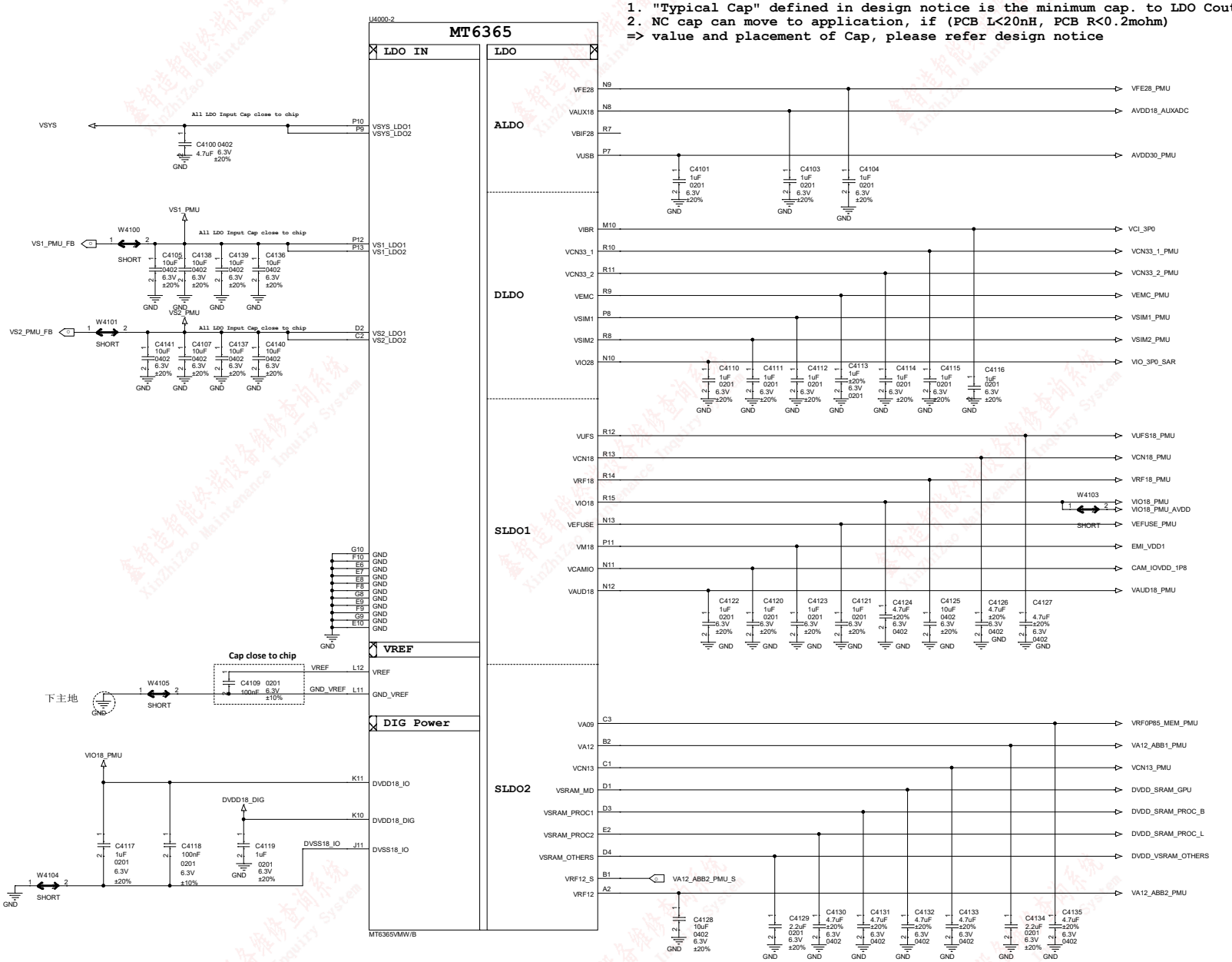

Title	MT6365 LDO		
Size A2	Document Number MT6877		Rev P0
Date: Monday, June 27, 2022	Sheet 42 of 74		

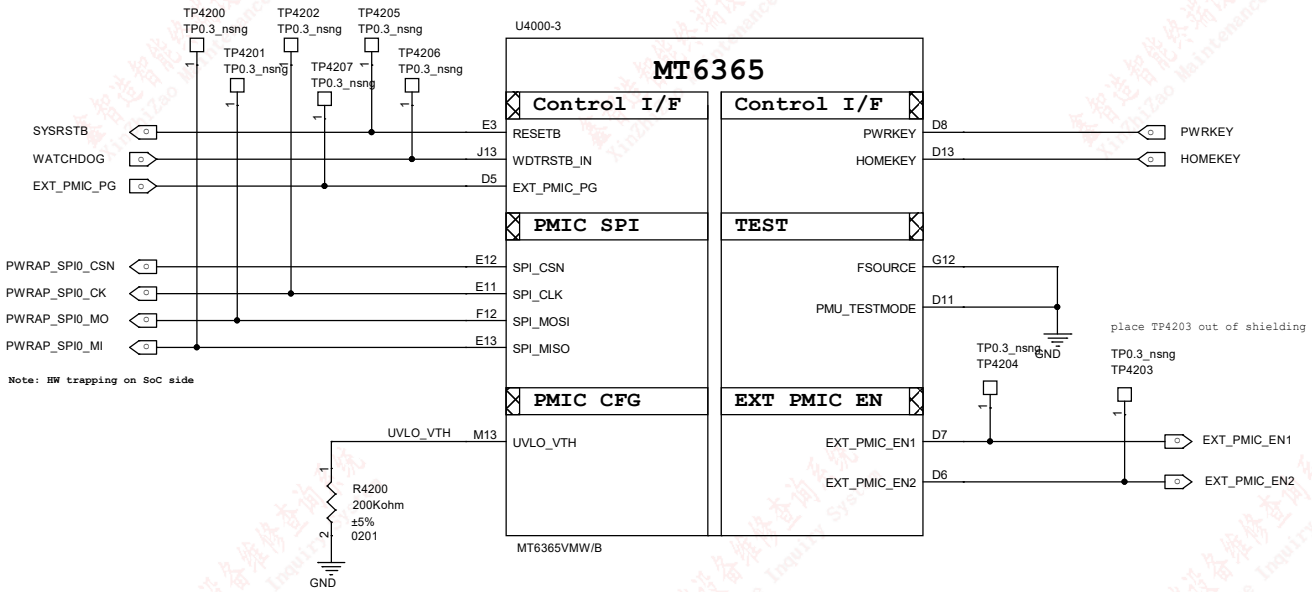

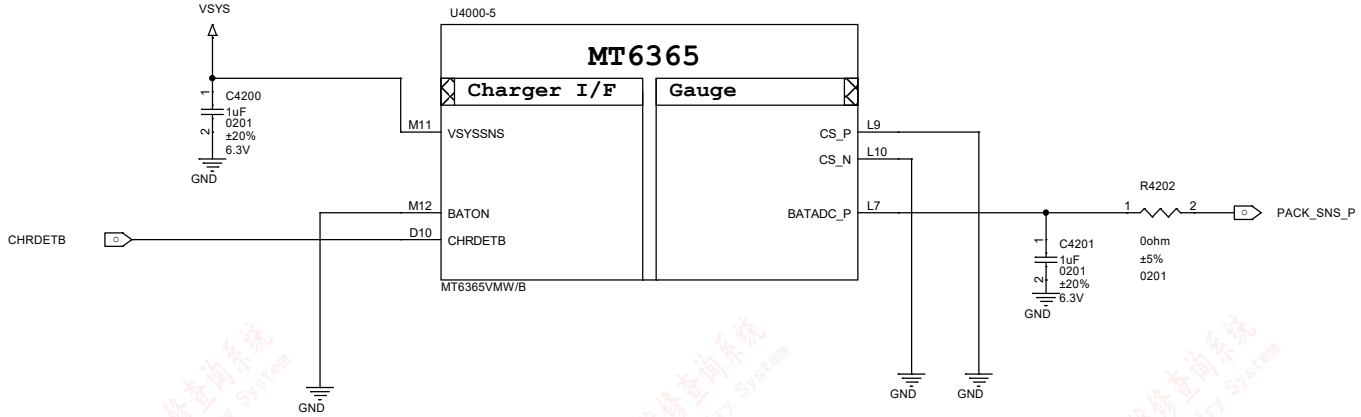

Title	MT6365 General	
Size A3	Document Number MT6877	Rev P0
Date: Tuesday, August 16, 2022	Sheet 43 of 74	

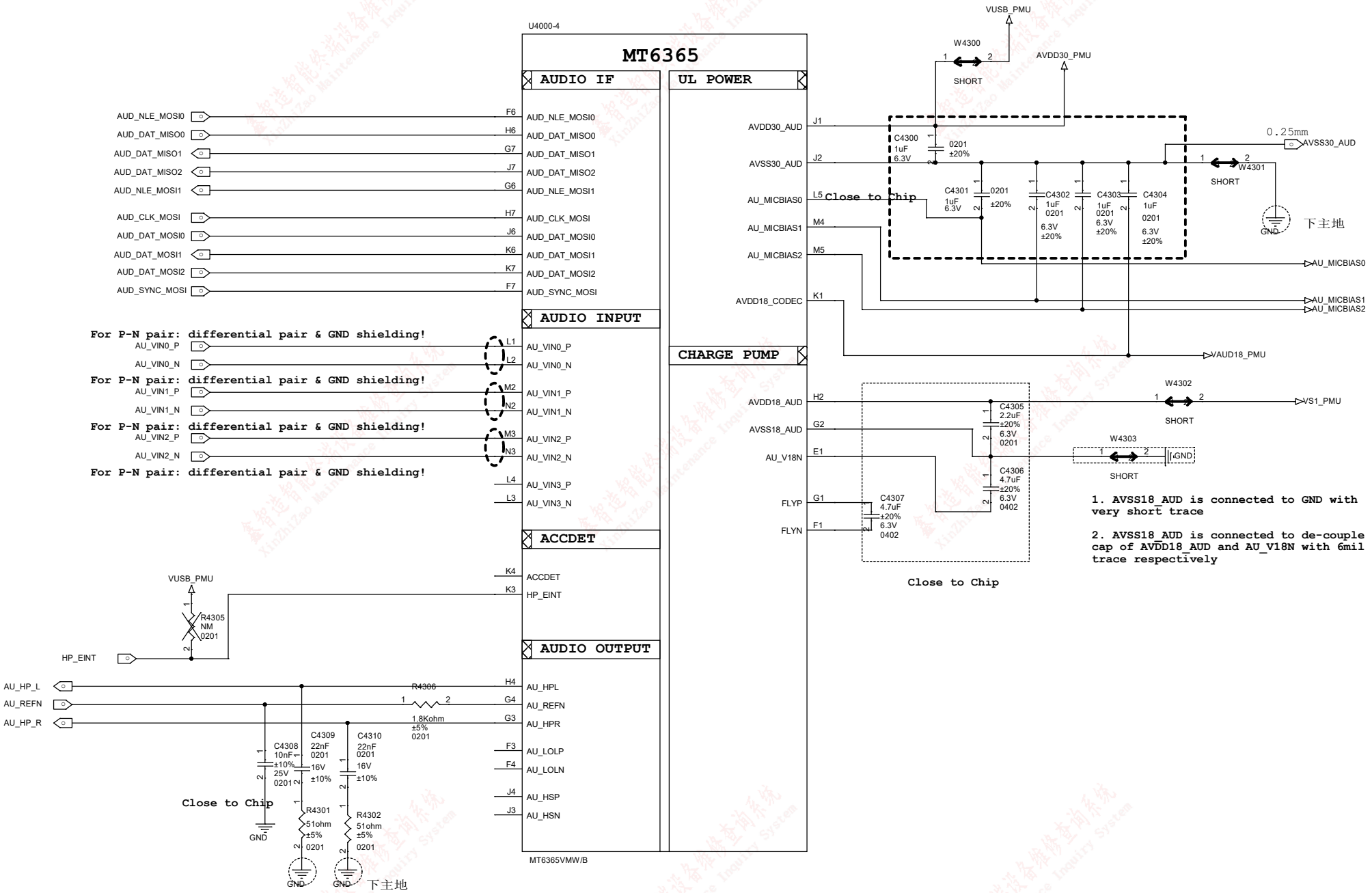

1. AVSS18_AUD is connected to GND with very short trace

2. AVSS18_AUD is connected to de-couple cap of AVDD18_AUD and AU_V18N with 6mil trace respectively

-AU_HPL and AU_HPR should be routed as single end signal and be guarded by GND, up and down, left and right respectively

-The suggested layout pattern of AU_HPL/ AU_HPR/ AU_REFN is " GND AU_HPL AU_REFN AU_HPR GND"

Title	MT6365 AUDIO	
Size A3	Document Number MT6877	Rev P0
Date: Monday, June 27, 2022	Sheet 44 of 74	

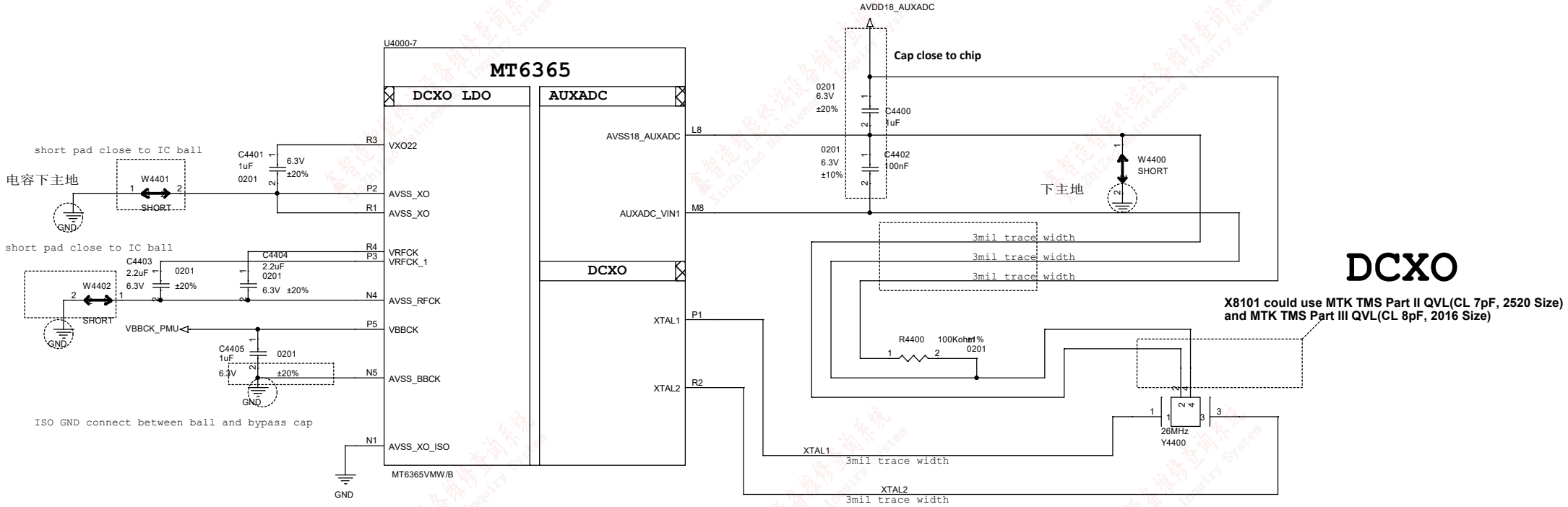

Route XTAL1/ XTAL2/ AVDD18_AUXADC/ AUXADC_VIN/ AVSS18_AUXADC with 3mils width traces and well GND shielding.

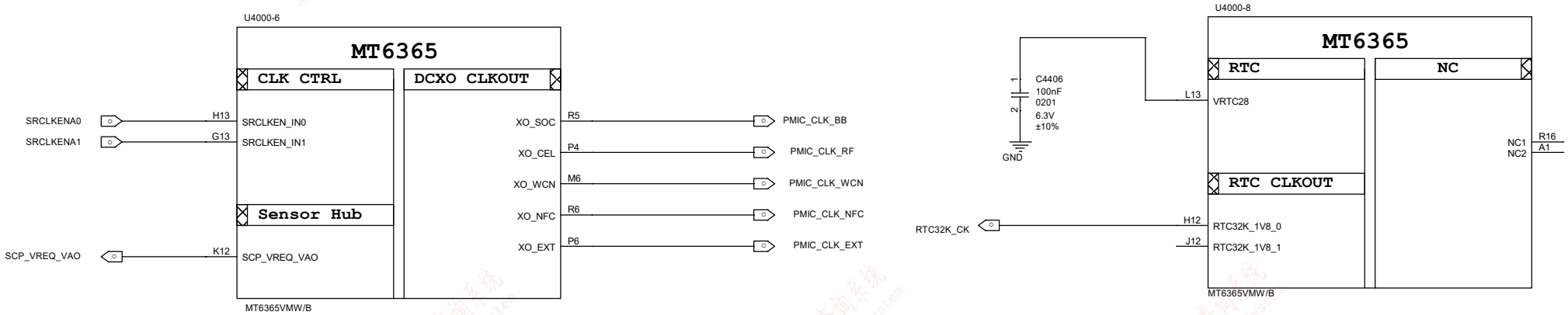

Title	MT6365 CLOCK	
Size A3	Document Number MT6877	Rev P0
Date: Monday, June 27, 2022	Sheet 45 of 74	

MT6315 4-Phase Buck (GPU)

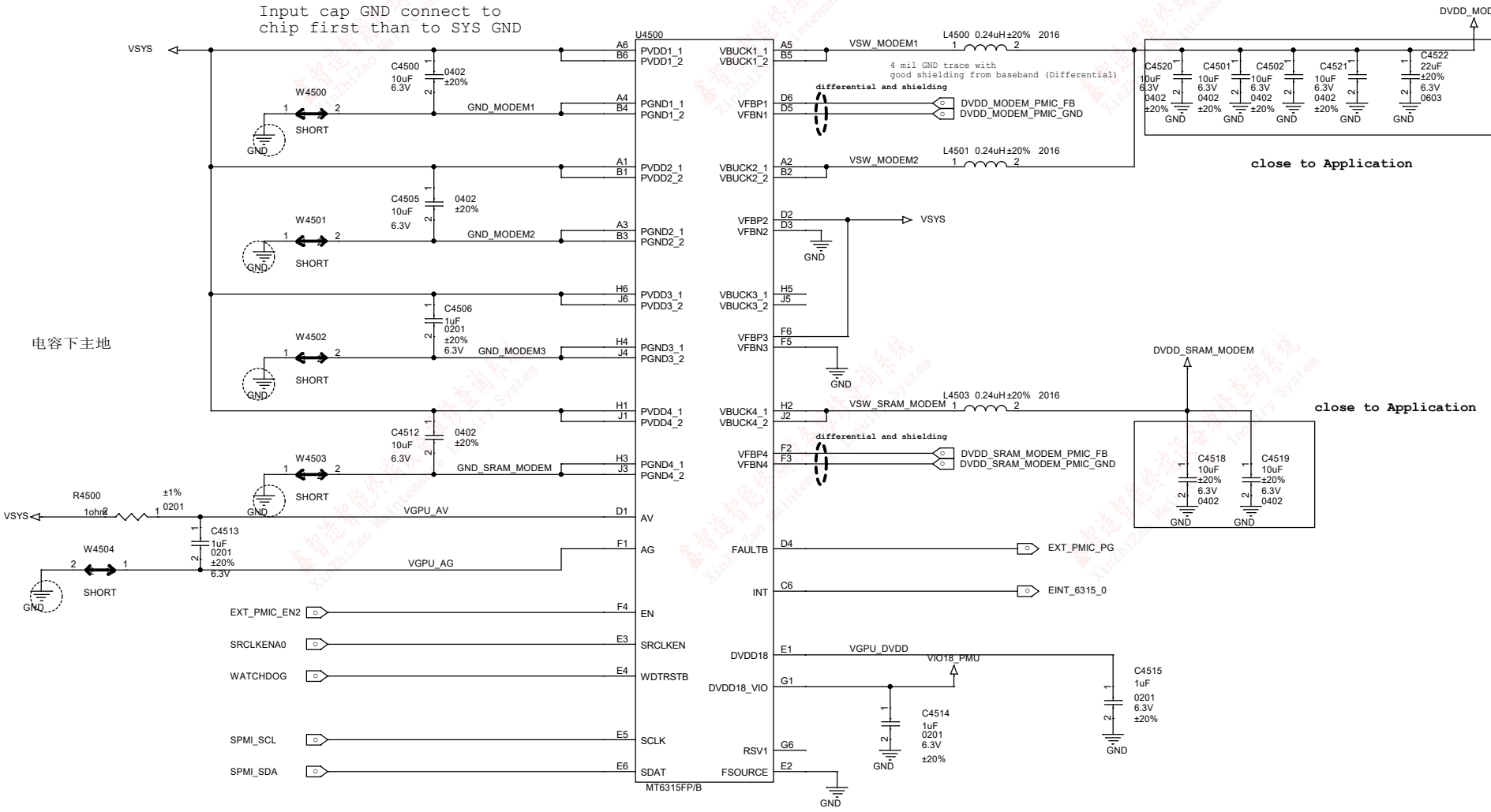

Title	MT6315 VMD	
Size A3	Document Number MT6877	Rev P0
Date: Monday, June 27, 2022	Sheet 46 of 74	

MT6315 4-Phase Buck (CPU)

Input cap GND connect to
chip first than to SYS GND

ALL C out Close to SOC

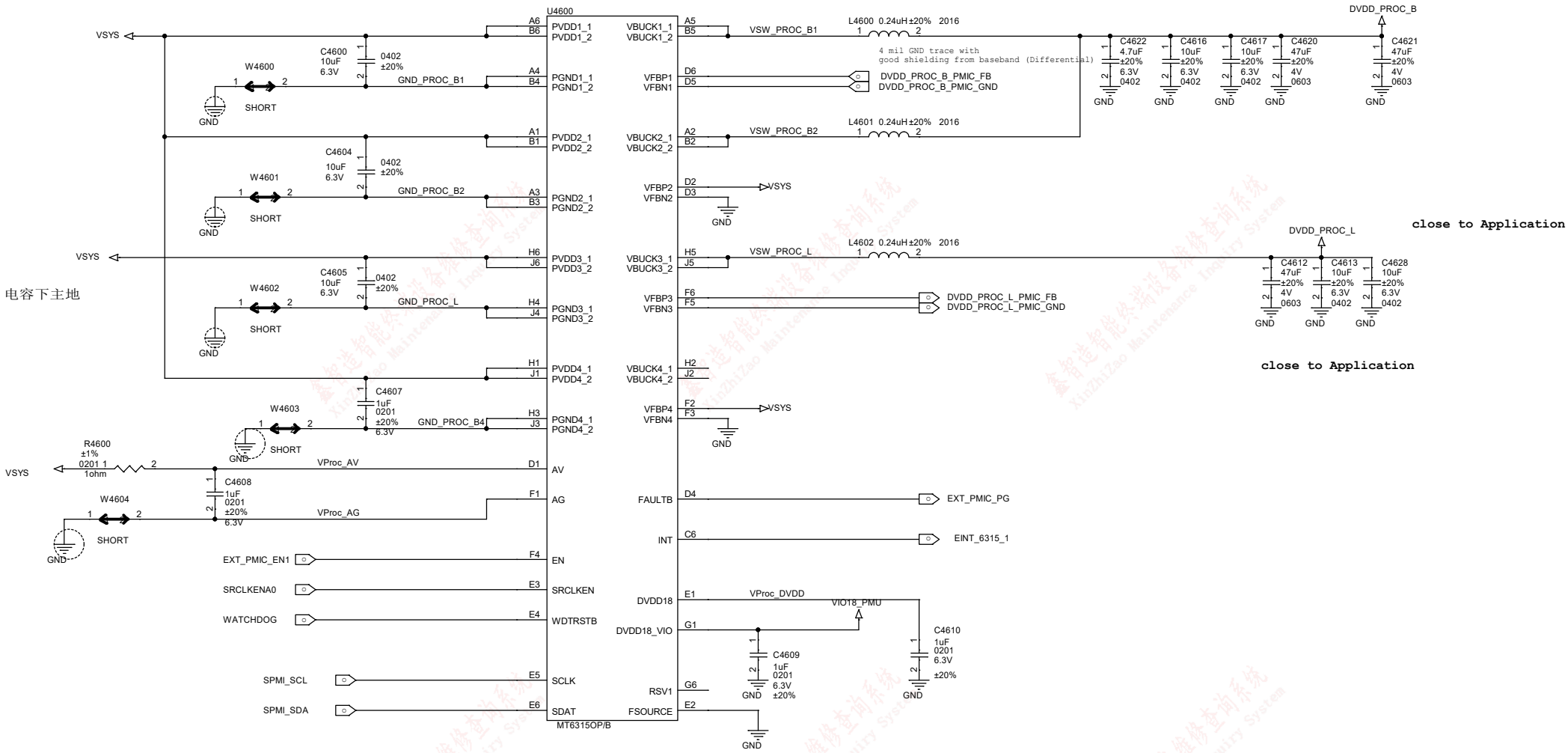

Title	MT6315 Vproc	
Size A3	Document Number MT6877	Rev P0
Date: Monday, June 27, 2022	Sheet 47 of 74	

鑫智造智能终端设备维修查询系统
XinZhiZao Maintenance Inquiry System

Title	MT6315 Reserved	
Size A3	Document Number MT6877	Rev P0
Date: Monday, June 27, 2022	Sheet 48 of 74	

ALL C out Close to DDR

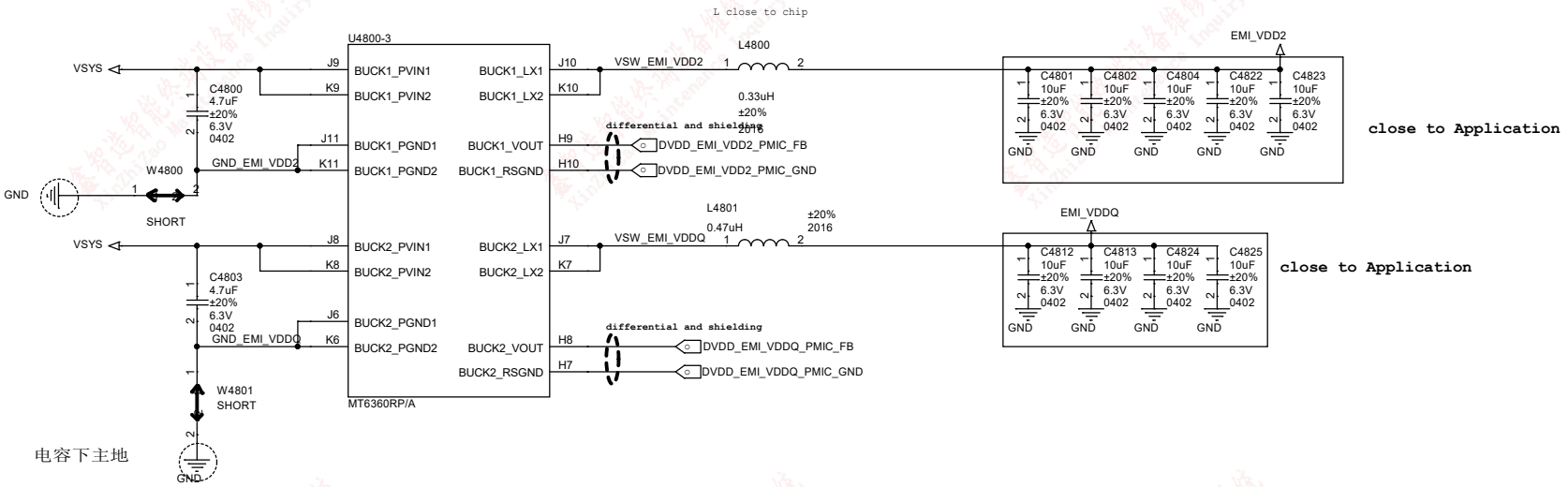

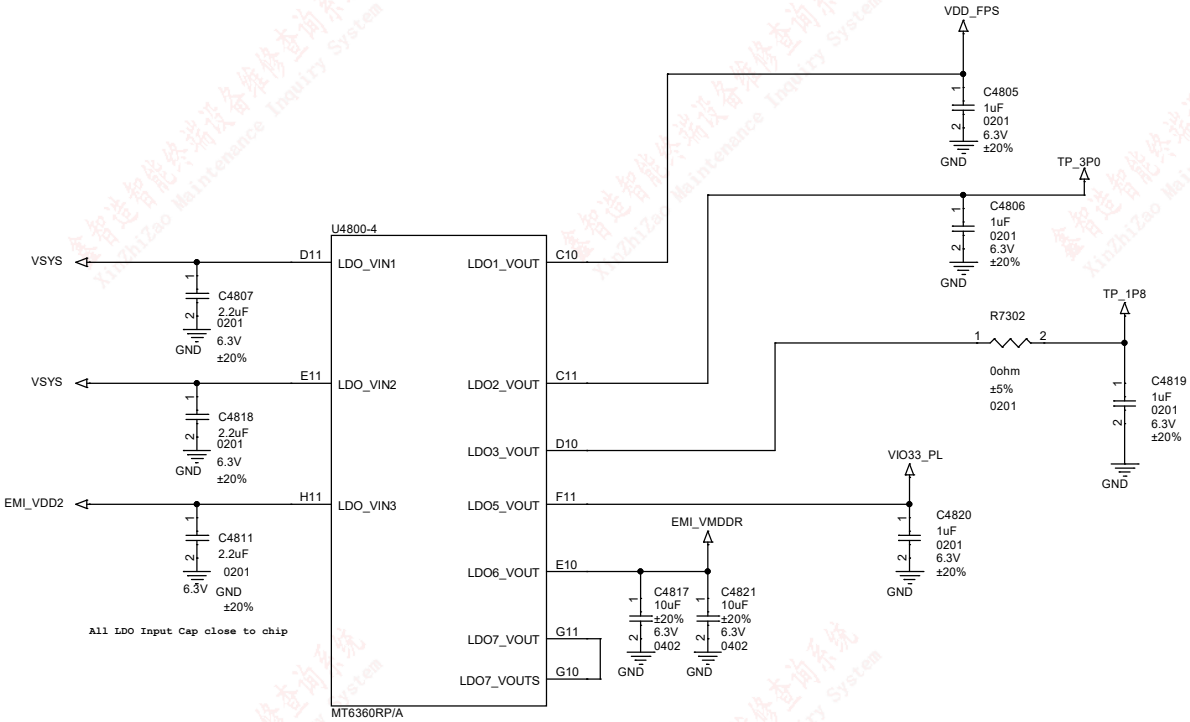

LDO1	VFP
LDO2	VTP
LDO3	VMC
LDO5	SD_CARD_2P95
LDO6	
LDO7	VMDDR_EN

Title	MT6360 BUCK LDO	
Size A3	Document Number MT6877	Rev P0
Date: Monday, June 27, 2022	Sheet 49 of 74	

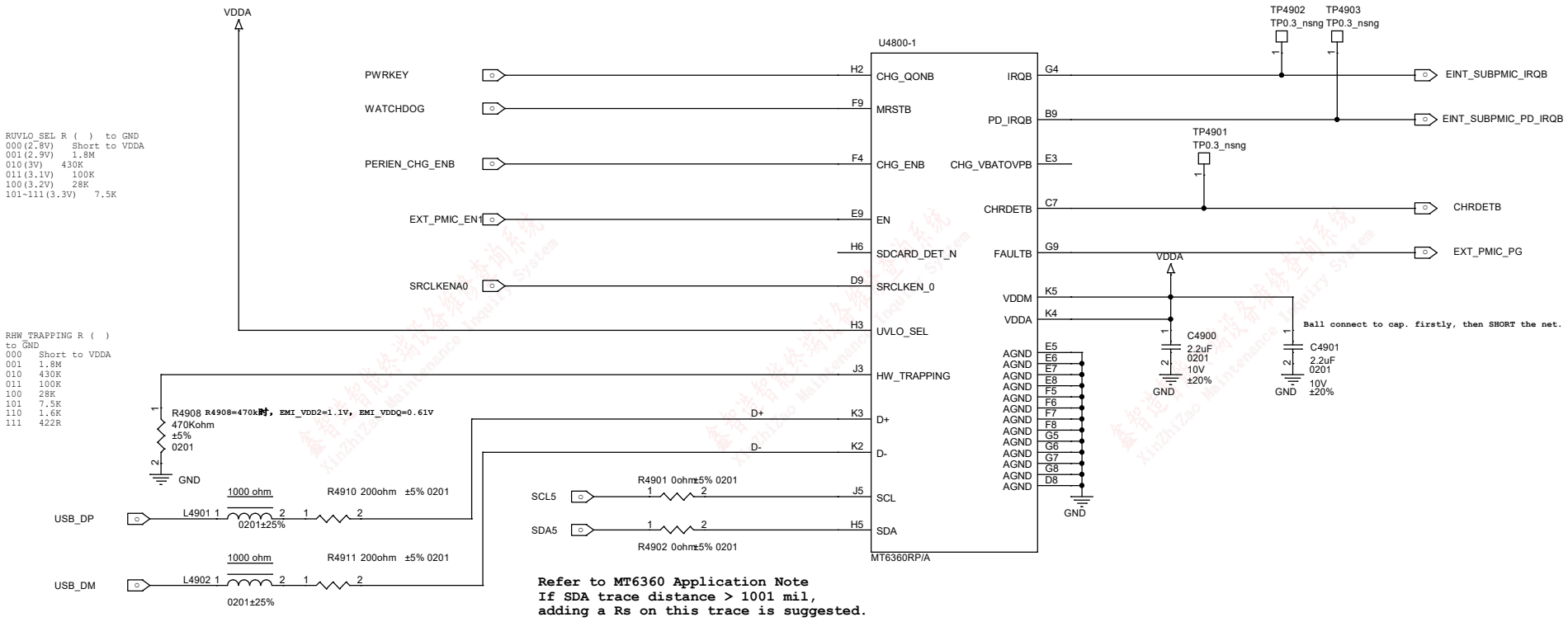

Title	MT6360 General	
Size A3	Document Number MT6877	Rev P0
Date: Tuesday, August 16, 2022	Sheet 50 of 74	

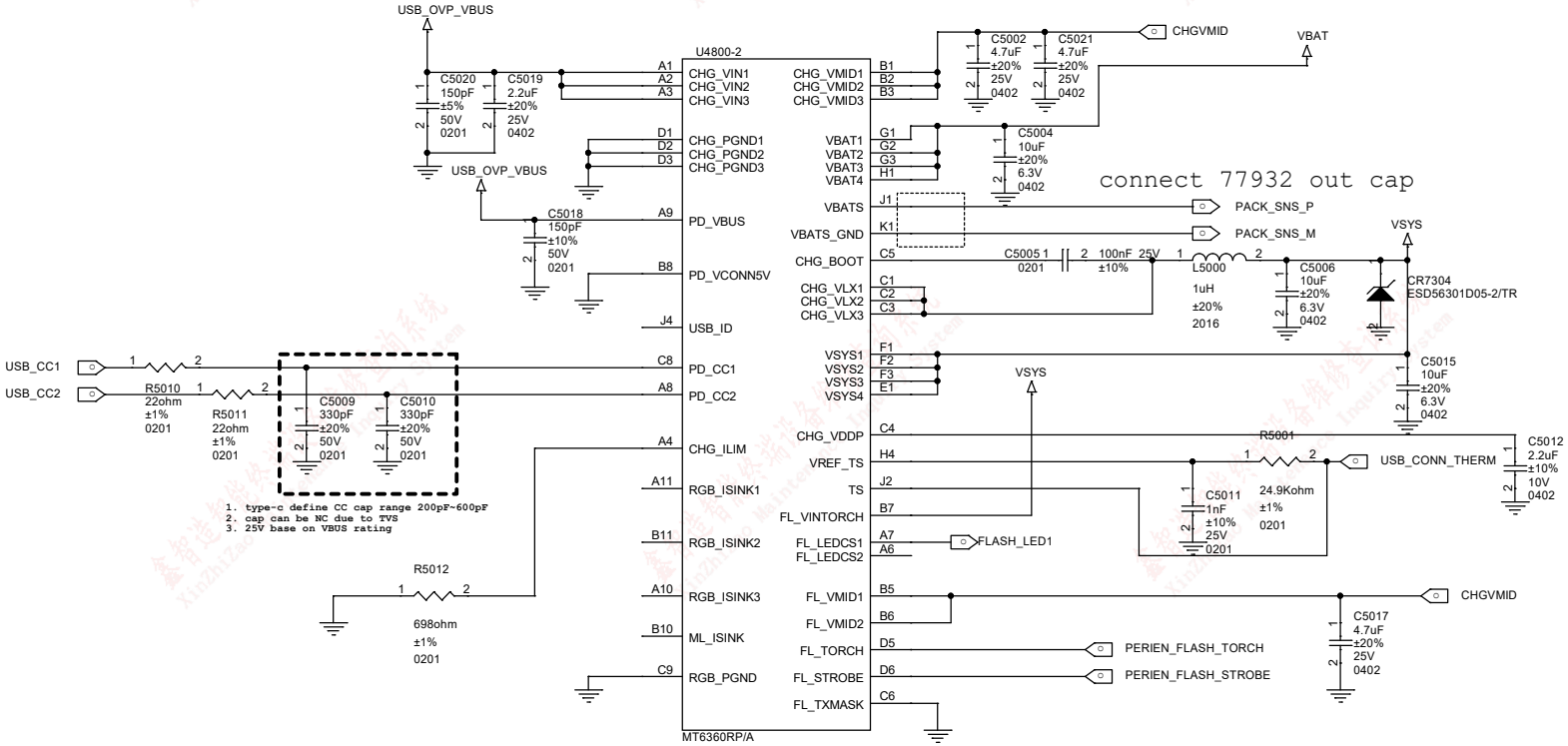

Title	MT636 CHARGER	
Size A3	Document Number MT6877	Rev P0
Date: Monday, June 27, 2022	Sheet 51 of 74	

鑫智造智能终端设备维修查询系统
XinZhiZao Maintenance Inquiry System

MI PHONE			
Title	MT6873_5GA		
Size C	Document Number K16_MAIN		Rev
Date: Monday, June 27, 2022	Sheet 52 of 74		

	MI PHONE
Title	MT6873_5GA
Size: C	Document Number: K16_MAIN
Rev	
Date: Monday, June 27, 2022	Sheet 53 of 74

鑫智造智能终端设备维修查询系统
XinZhiZao Maintenance Inquiry System

鑫智造智能终端设备维修查询系统
XinZhiZao Maintenance Inquiry System

MI PHONE		
Title		
Size A3	Document Number Reserved(for SMB1355)	Rev
Date: Monday, June 27, 2022	Sheet 1 of 54 74	

	MI PHONE
Title	MT6873_5GA
Size: C	Document Number: Reserved(for SMB1355)
Rev	
Date: Monday, June 27, 2022	Sheet 55 of 74

鑫智造智能终端设备维修查询系统
XinZhiZao Maintenance Inquiry System

鑫智造智能终端设备维修查询系统
XinZhiZao Maintenance Inquiry System

MI PHONE		
Title		
Size A2	Document Number Reserved(for SM81355)	Rev
Date: Monday, June 27, 2022	Sheet 56 of 74	

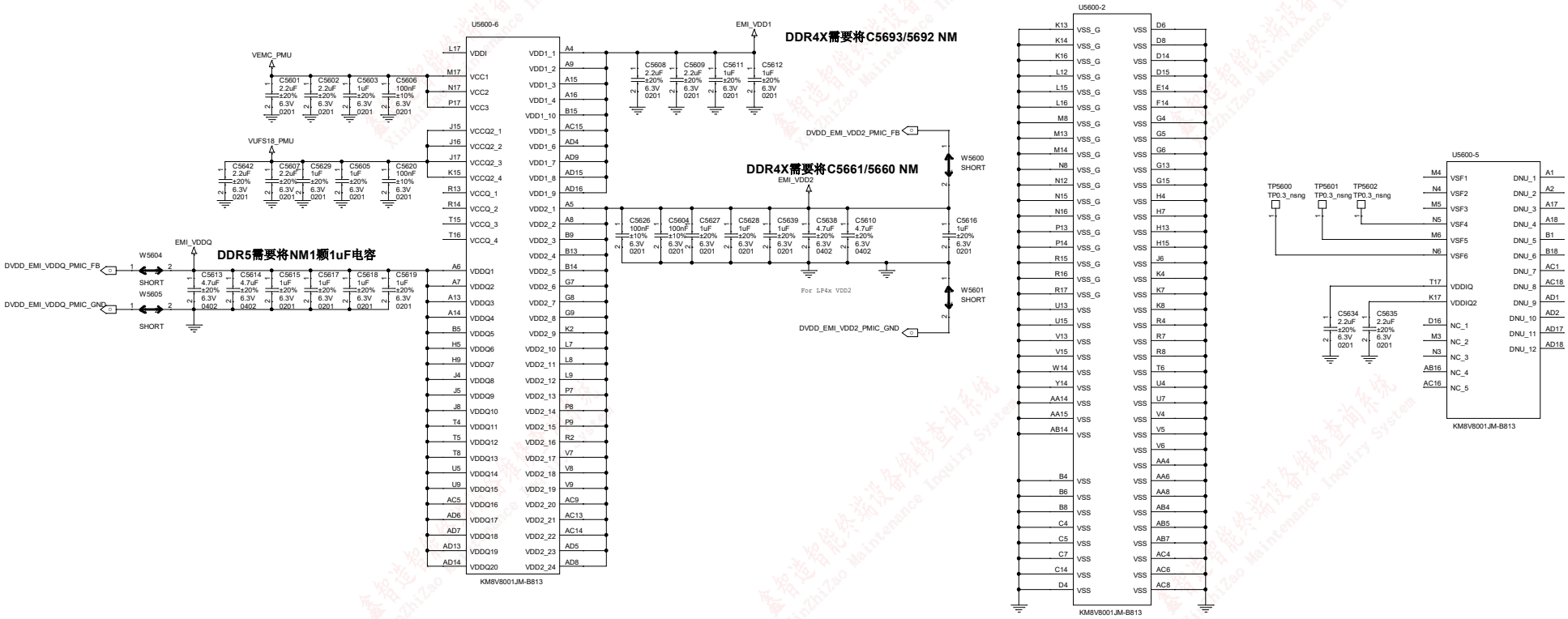

Title	K16_MAIN
Size A2	Document Number MEMORY POWER
Rev	P0
Date:	Tuesday, August 16, 2022
Sheet	57 of 74

UFS 2.2

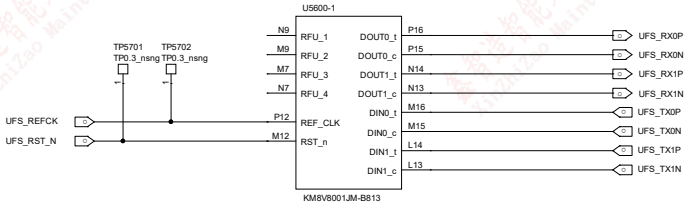

LPDDR4/4x

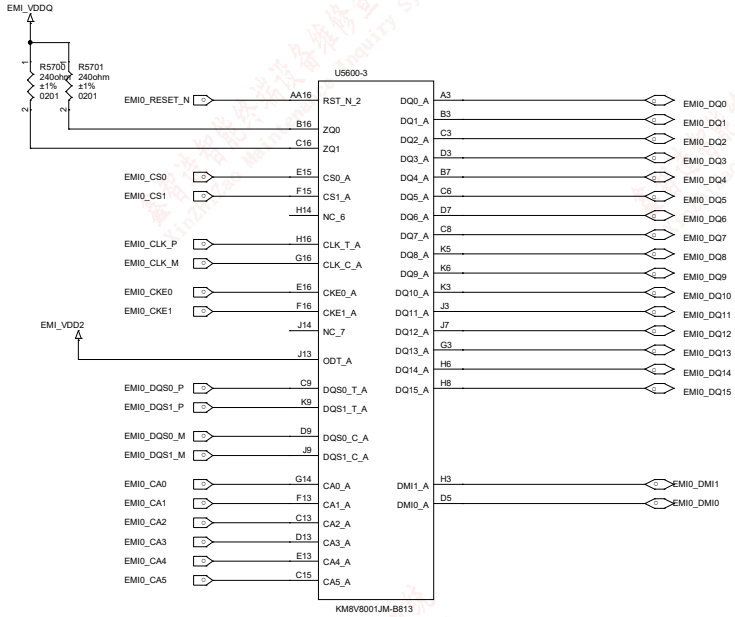

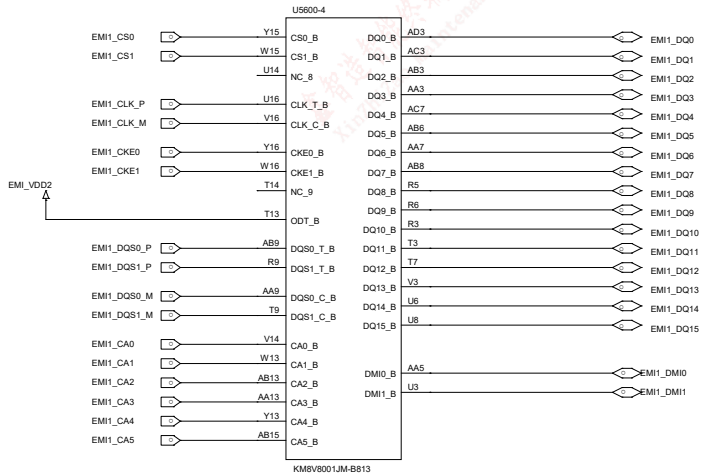

Title	K16_MAIN	
Size A2	Document Number MEMORY UFS/LPDDR4X	Rev P0
Date: Tuesday, August 16, 2022	Sheet 58 of 74	

鑫智造智能终端设备维修查询系统
XinZhiZao Maintenance Inquiry System

File:	<Title>	
Size: A1	Document Number: <Doc>	Rev: <Rev Code>
Date: Monday, June 27, 2022	Sheet 59 of 74	

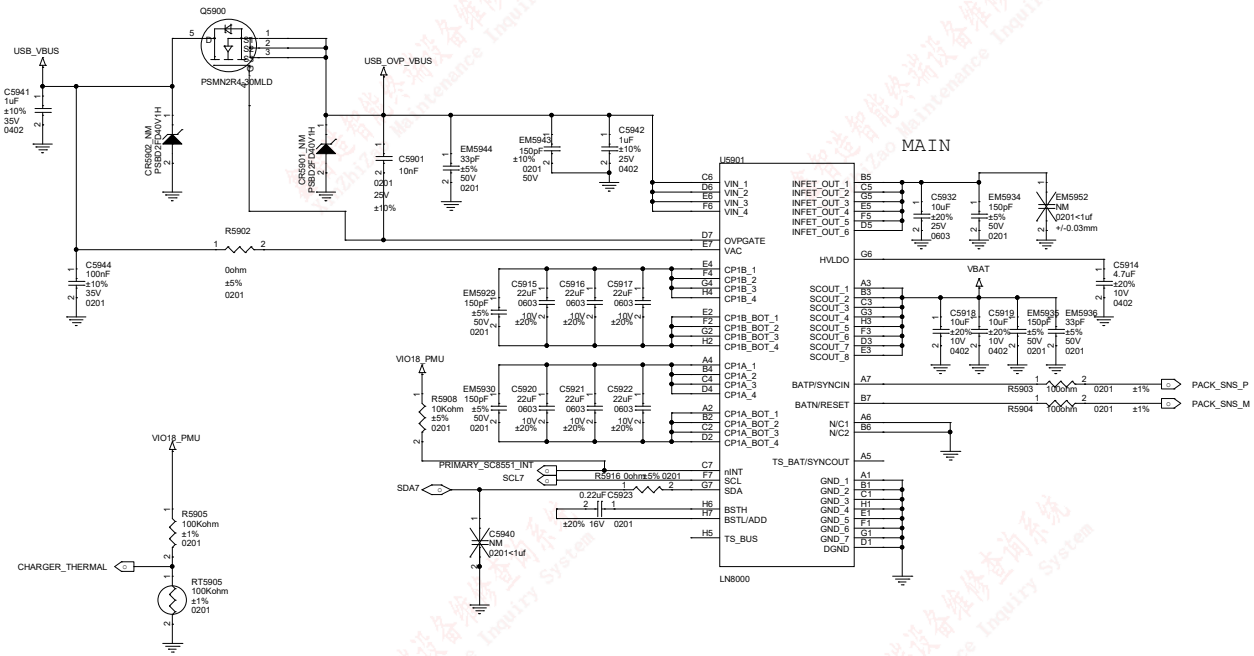

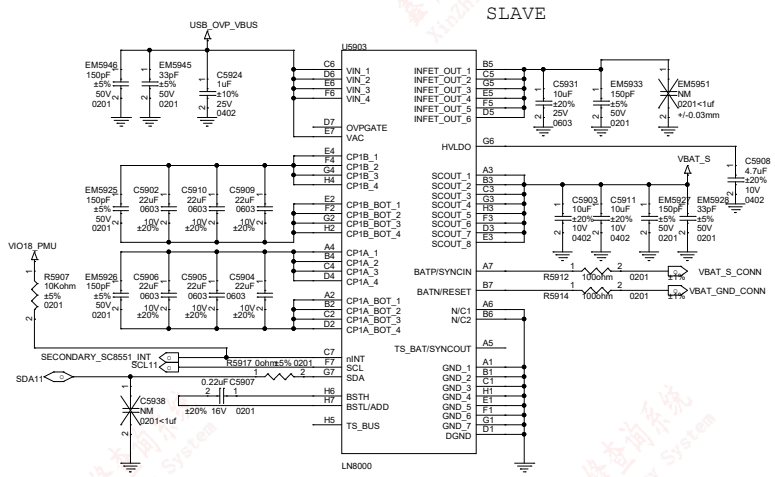

MI PHONE		
Title: MT6873_5GA		
Size: A2	Document Number: Reserved(for WCD)	Rev: P0
Date: Monday, June 27, 2022	Sheet 60 of 74	

鑫智造智能终端设备维修查询系统 XinZhiZao Maintenance Inquiry System

Earphone Microphone

SPK

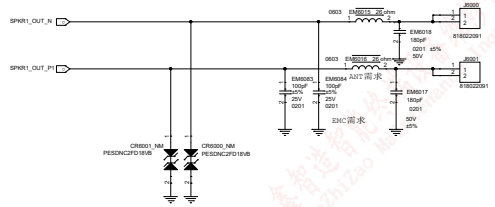

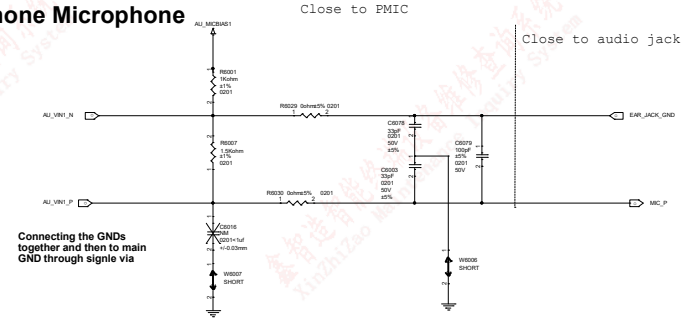

SPKR PA

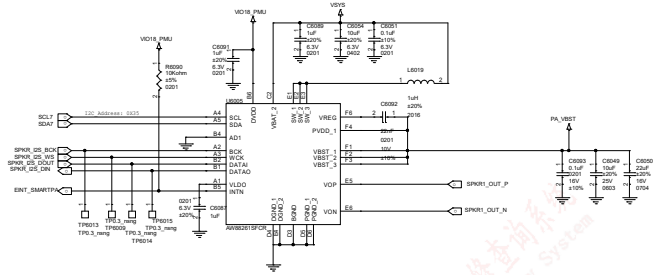

SPKR PA

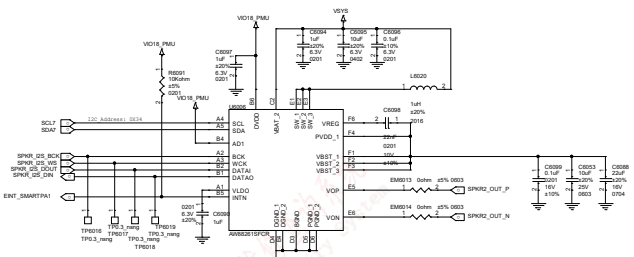

HEADSET

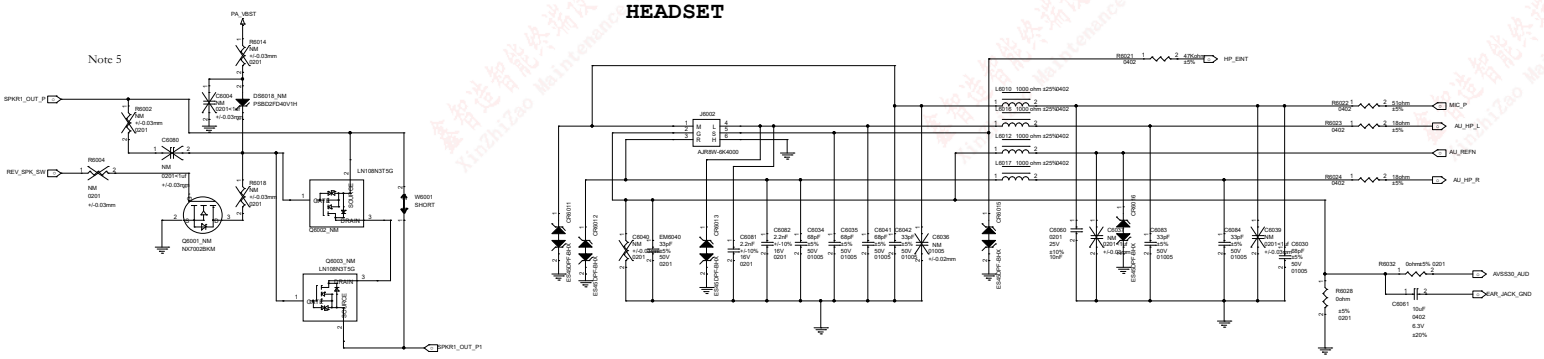

Note1: 若无FM功能，删掉C6031 W6002 L6015

Second MIC

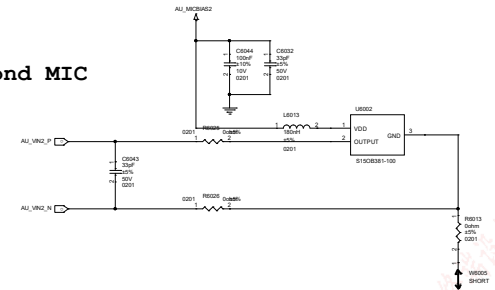

MI PHONE			
Title: MT6873_SGA			
Size: A1	Document Number: AUDIO		Rev:
Date: Friday, August 19, 2022	Sheet 61 of 74		

A+G

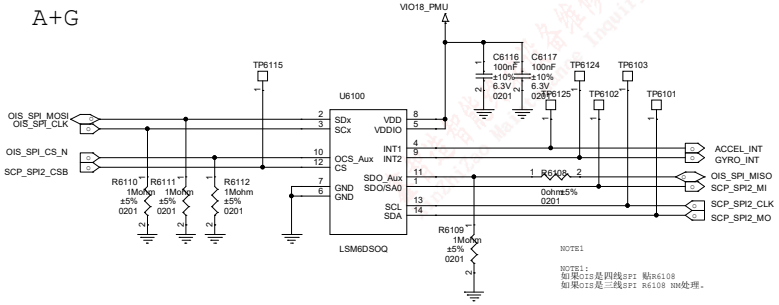

Sidekey

音量键PCB 上要加丝印

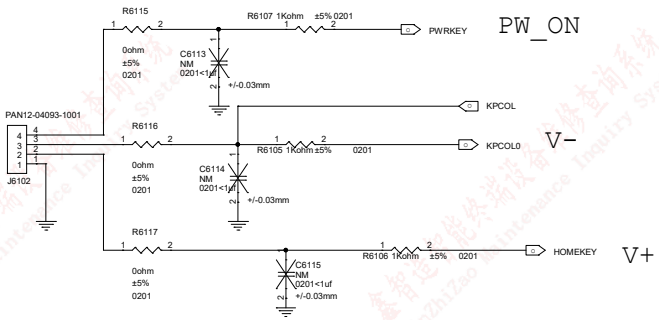

Title	K16_MAIN	
Size A2	Document Number SENSOR	Rev P0
Date: Tuesday, August 16, 2022	Sheet 62 of 74	

COMPASS

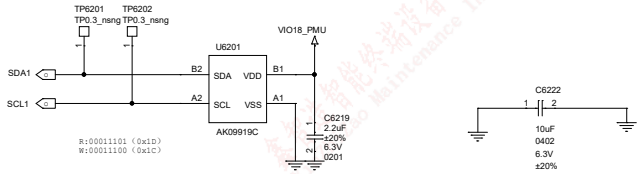

如未来增加2供QMC6308
则需要修改C7043为2.2uF

FLASH CON

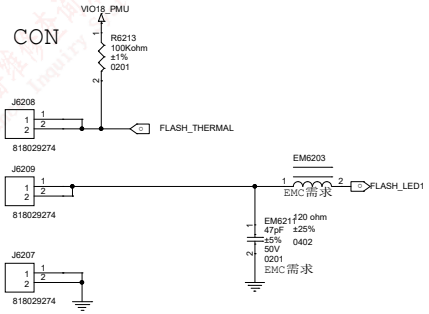

FP+PWRKEY

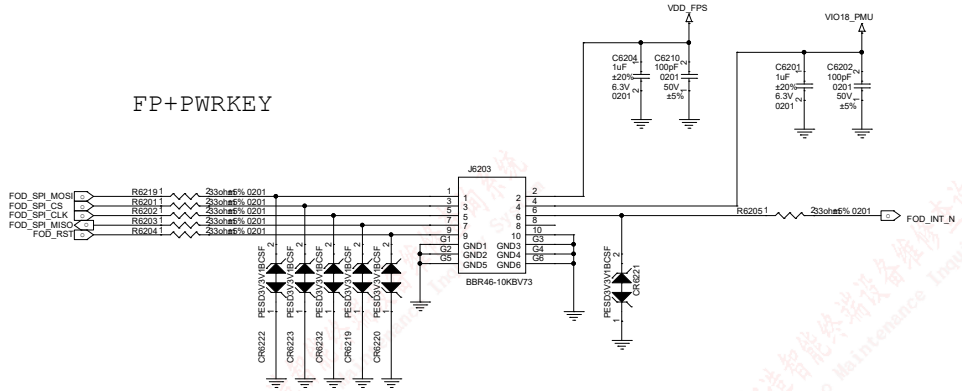

INFRARED

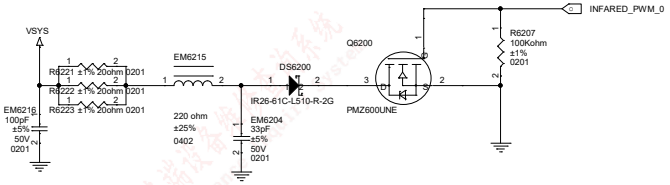

P_L-sensor

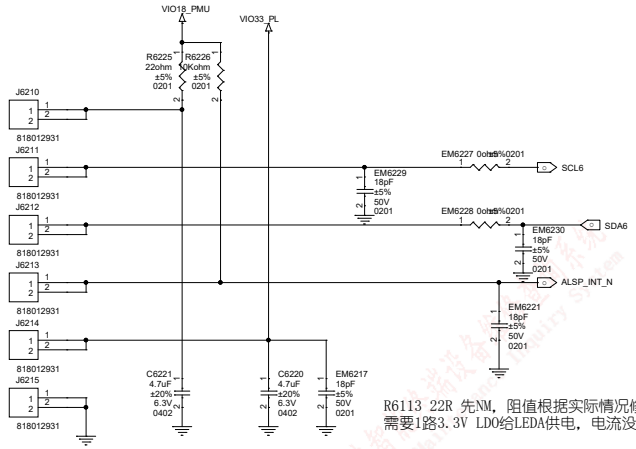

R6113 22R 先NM，阻值根据实际情况修改
需要1路3.3V LDO给LEDA供电，电流没啥要求

MI PHONE			
Title: K16_MAIN			
Size: A2	Document Number: SENSOR-2		Rev: P0
Date: Tuesday, August 16, 2022	Sheet 63 of 74		

鑫智造智能终端设备维修查询系统 XinZhiZao Maintenance Inquiry System

鑫智造智能终端设备维修查询系统
XinZhiZao Maintenance Inquiry System

MI PHONE	
Title	MT6873_5GA
Size A3	Document Number SIM CONNECTOR
Rev	P0
Date:	Sheet 64 of 74

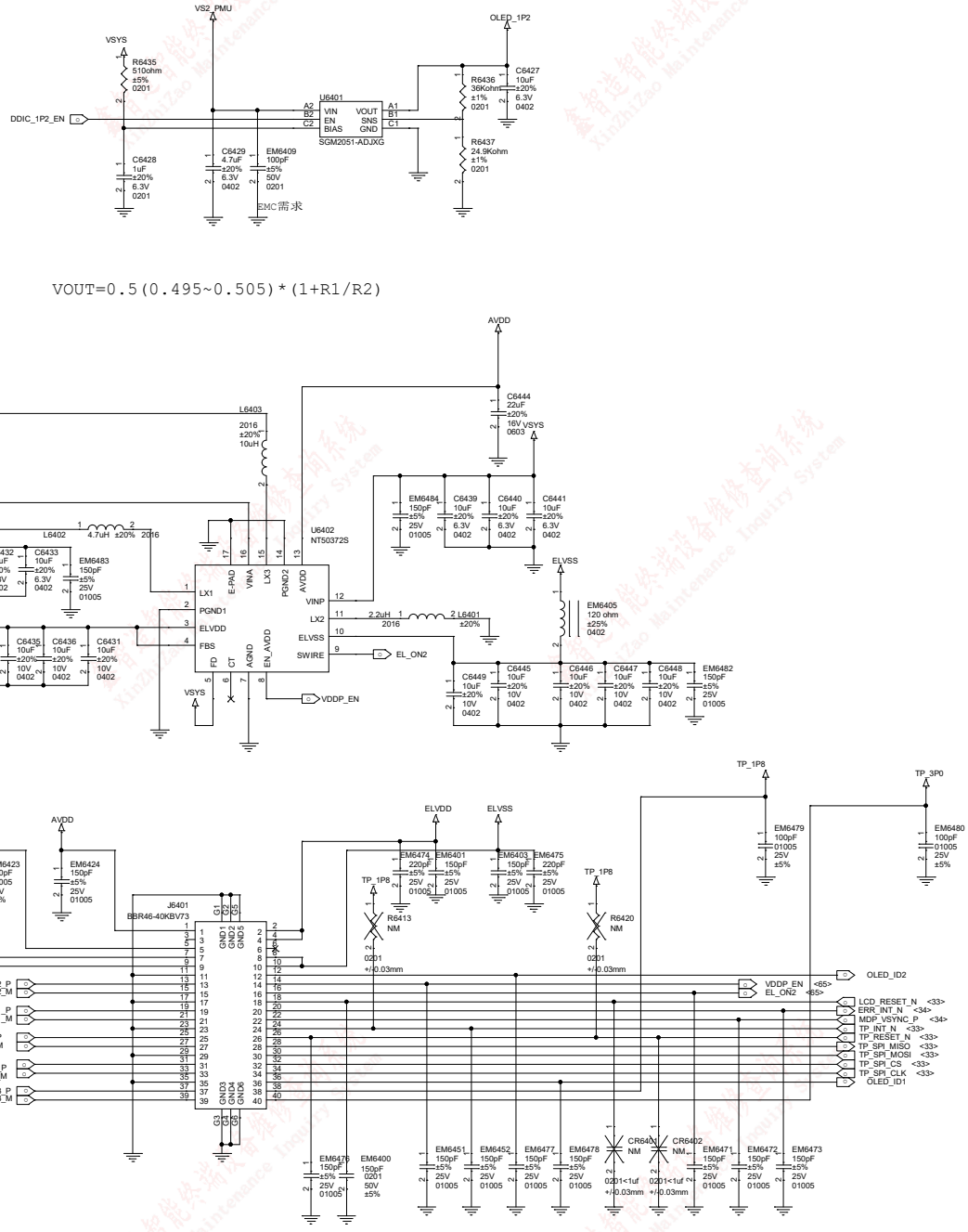

Title: K16_MAIN		
Size: A2	Document Number: AMOLED	Rev: P0
Date: Wednesday, July 27, 2022	Sheet 65 of 74	

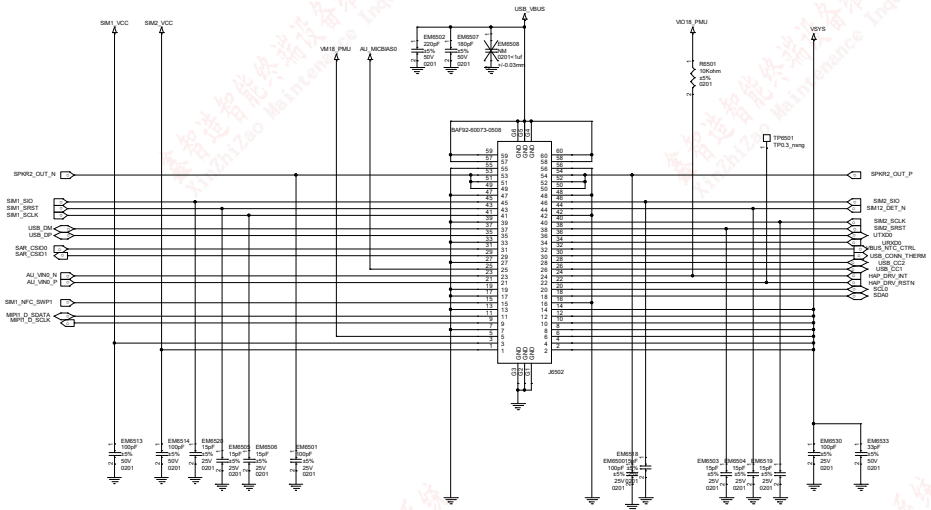

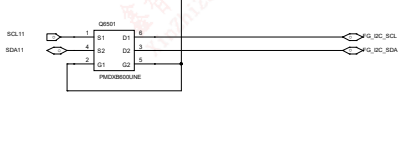

PRIMARY BAT CON

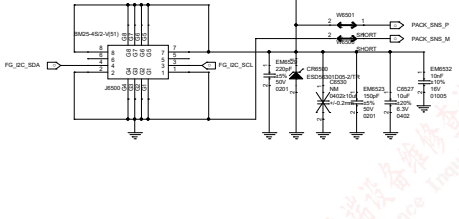

SECONDARY BAT CON

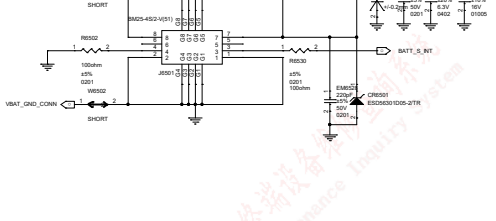

Title: J11 MAIN			
Size: A1	Document Number: BTB		Rev: P0
Date: Tuesday, August 16, 2022	Sheet 66 of 74		

鑫智造智能终端设备维修查询系统 XinZhiZao Maintenance Inquiry System

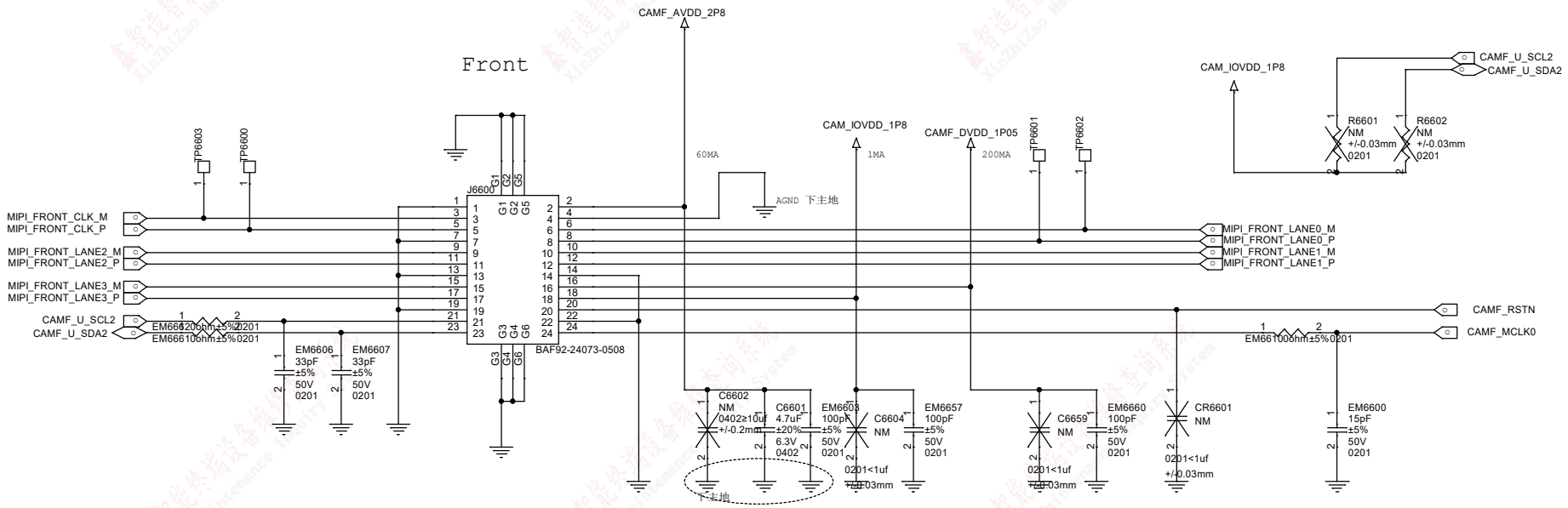

Title	K16_MAIN	
Size A3	Document Number Reserved(for Analog FM)	Rev P0
Date: Tuesday, August 16, 2022	Sheet 67 of 74	

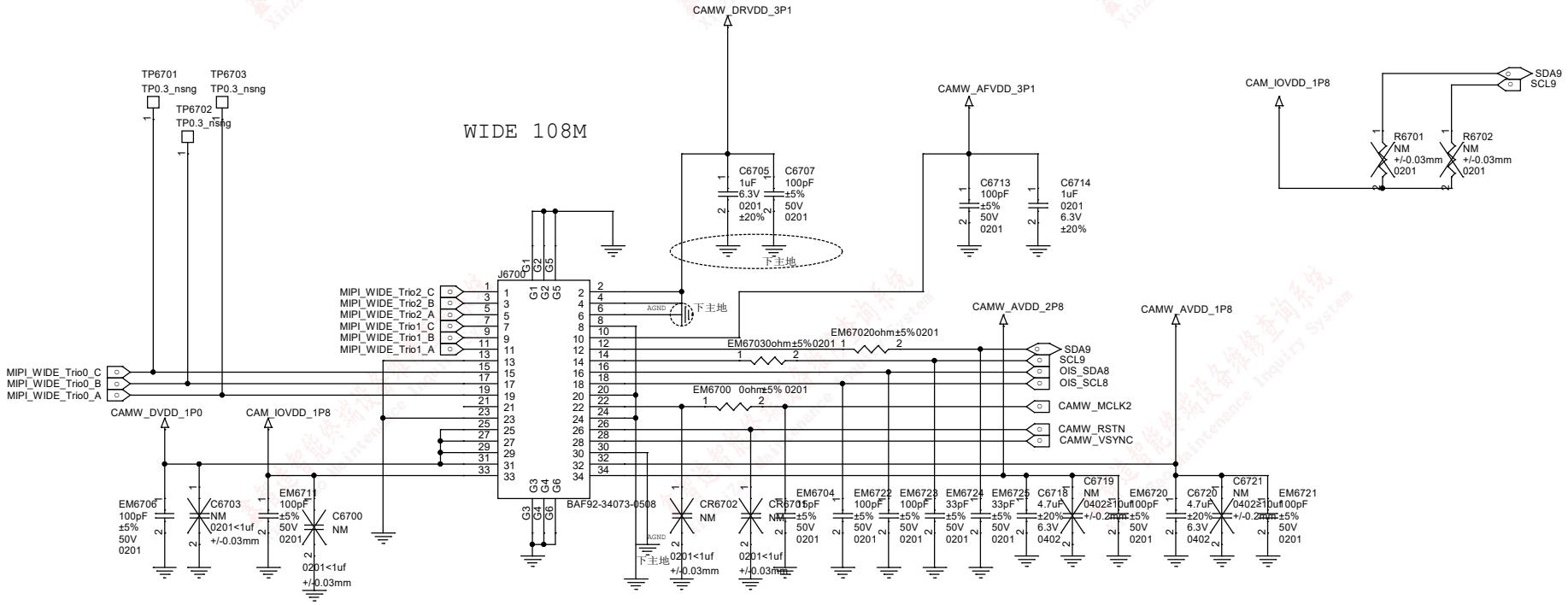

Title	K16_MAIN	
Size A3	Document Number WIDE&TELE CAMERA	Rev P0
Date: Tuesday, August 16, 2022	Sheet 68 of 74	

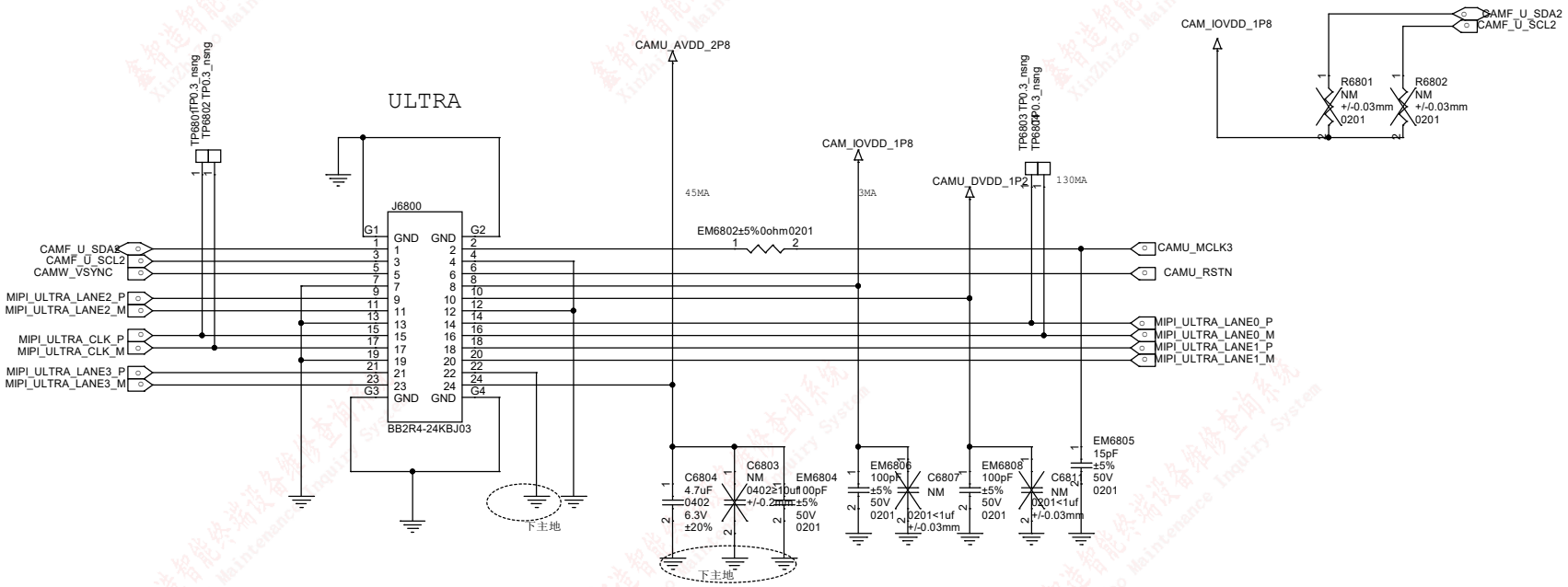

Title	K16_MAIN	
Size A3	Document Number ULTRA CAMERA	Rev P0
Date: Tuesday, August 16, 2022	Sheet 69 of 74	

2M MACRO

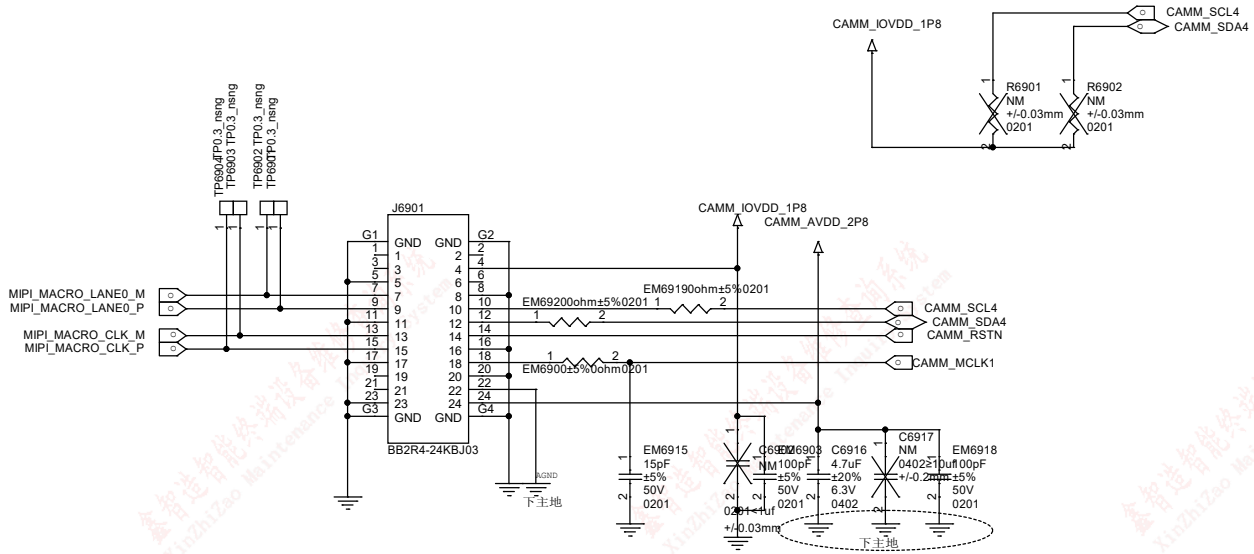

Title	K16_MAIN	
Size A3	Document Number ULTRA CAMERA	Rev P0
Date: Tuesday, August 16, 2022	Sheet 70 of 74	

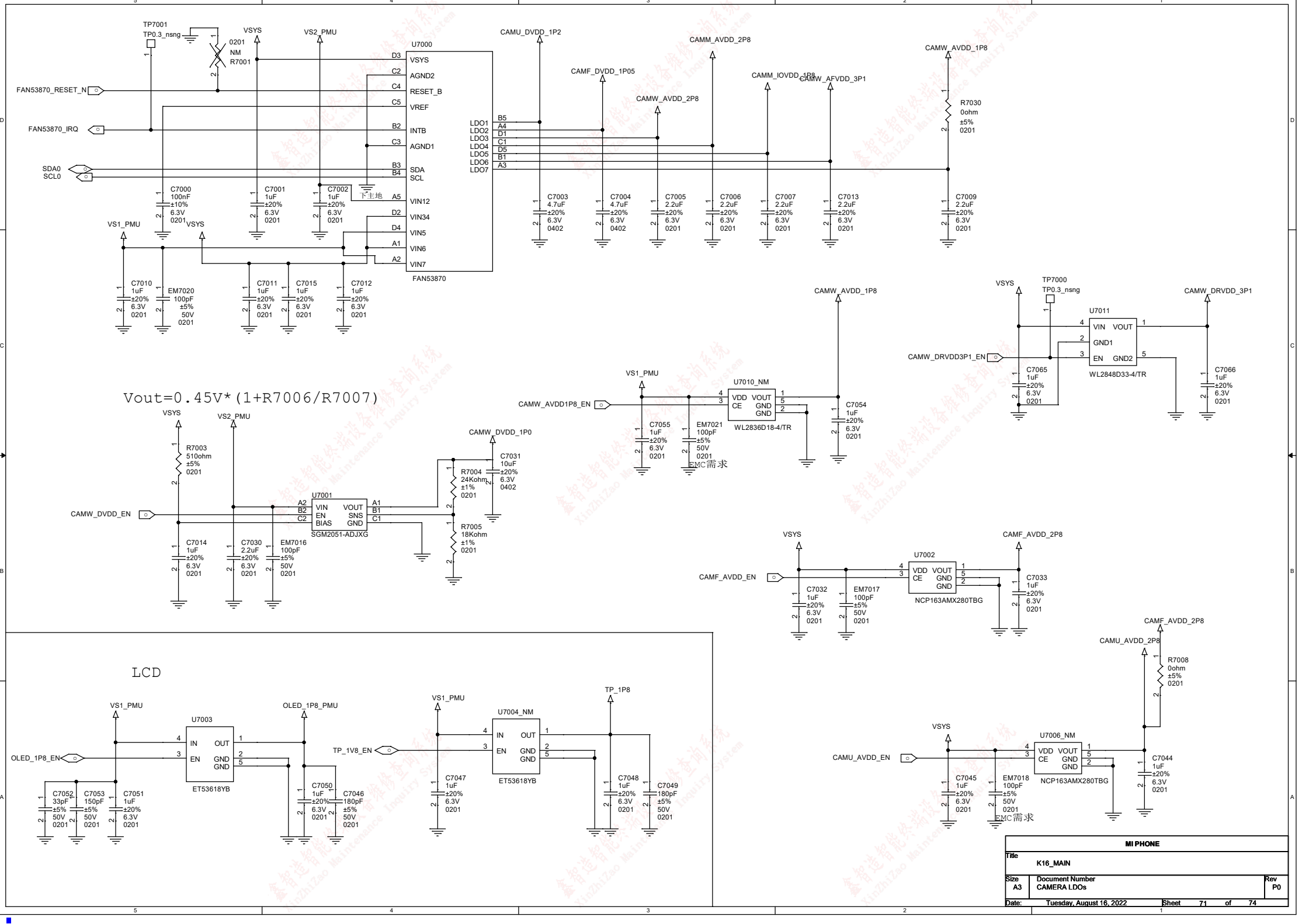

MI PHONE		
Title: K16_MAIN		
Size: A3	Document Number: CAMERA LDOs	Rev: P0
Date: Tuesday, August 16, 2022	Sheet 71 of 74	

Title	J11 MAIN
Size B	Document Number SIM
Rev	P0
Date:	Monday, June 27, 2022
Sheet	72 of 74

鑫智造智能终端设备维修查询系统 XinZhiZao Maintenance Inquiry System

Schematic design notice of "90_DEBUG_IO" page.

Note 90-1: UART Default support : UART0,
JTAG Default support : AP JTAG/MD_IO_JTAG

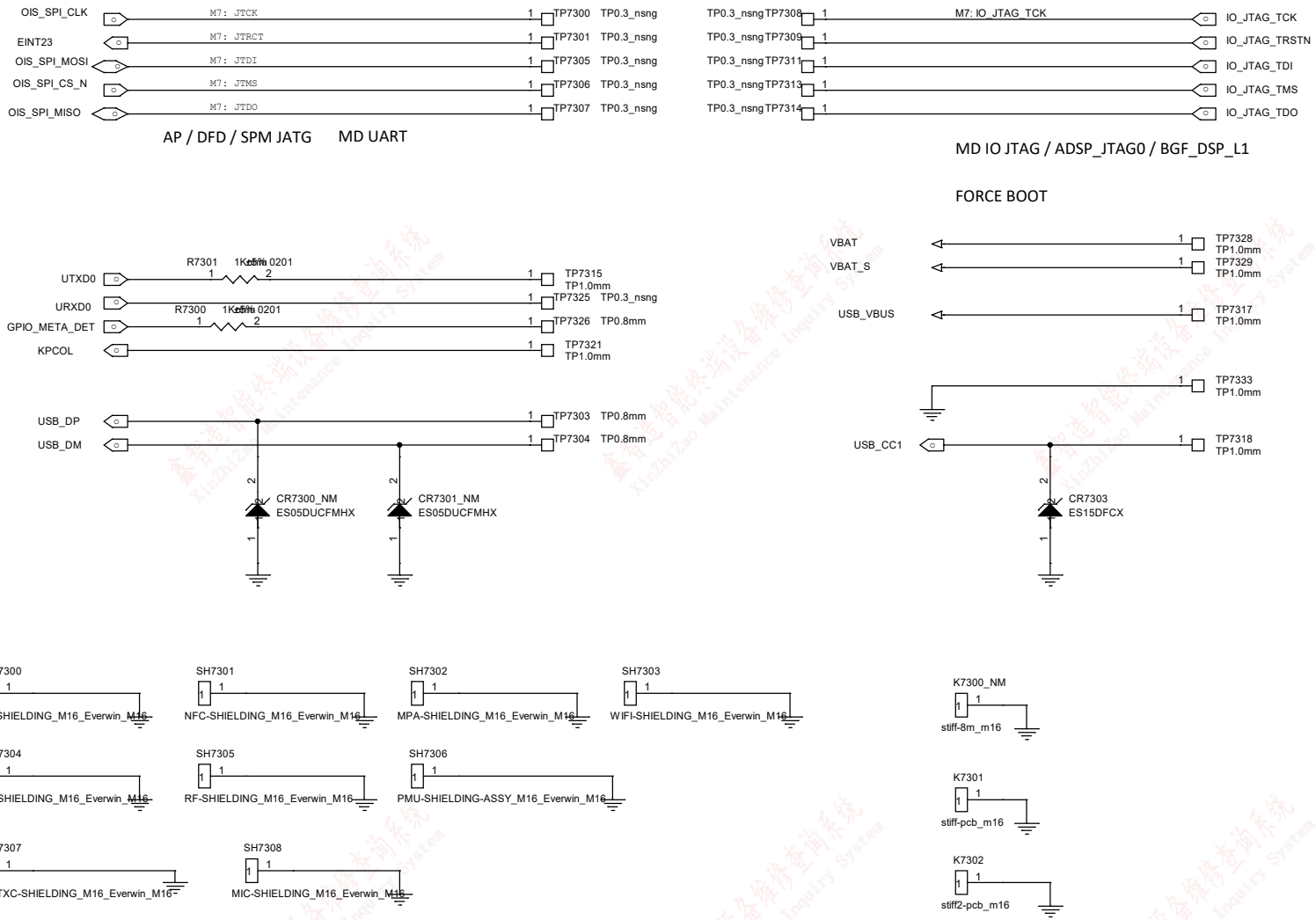

Title	J7 WLED	
Size A3	Document Number <Doc>	Rev P0
Date: Tuesday, August 16, 2022	Sheet 73 of 74	

鑫智造智能终端设备维修查询系统
XinZhiZao Maintenance Inquiry System

Title	<Title>	
Size A2	Document Number <Doc>	Rev <RevC
Date: Monday, June 27, 2022	Sheet 74 of 74	